UniCarriers Americas Corporation

OPERATOR'S MANUAL

MODELS 2W1/2W2

Platinum WPX/RPX Series Walkie & Walkie Rider Pallet
24V AC Powered Electric
6,000 & 8,000 lb. Capacities

OPERATOR

Printing: October 2015 (01)
Publication No.: 0M3UC-2W120
Printed in Marengo IL USA

Reliability.

It's the defining trait of our company and our forklifts.

UniCarriers' roots extend back over 100 years, and over that time, strong, reliable performance has always been the hallmark of our organization, our people and our equipment.

Today, our unrivaled reliability continues to provide UniCarriers' customers with a competitive edge. And together, we move the merchandise that moves world commerce with greater efficiency, economy and reliability.

When it comes to providing forklifts that make a difference for our customers and theirs...

We Never Quit.

UNICARRIERS AMERICAS OPERATOR'S MANUAL

MODEL 2W1/2W2 SERIES

WARNING

- **This Original Manual contains important safety information and must be made available to the operator.**
- **Keep this manual on the truck at all times.**
- **Do not operate the forklift unless you have reviewed and fully understand the Operator's Manual. Failure to follow all of the instructions in this manual could be a violation of the Occupational Safety and Health Act.**
- **Do not operate this forklift unless you are trained and authorized by your employer. Improper operation may result in a serious or fatal injury to yourself or others.**
- **On December 1st, 1998 the Occupational Safety and Health Administration (OSHA) adopted a new and stringent Powered Industrial Truck Operator Training rule 29 CFR 1910.178(1). Based on the Industrial Truck Standards Development Foundation (ITSDF) B56 2000 standard, Operator Training is now explained in detail. The employer shall ensure that operators of powered industrial trucks are competent and trained in the safe and proper operation of powered industrial trucks. This training will include formal training, practical demonstrations and an on-site evaluation.**

OSHA also requires a proper pre-shift inspection, and any repair required shall be performed by a person trained and authorized to repair industrial trucks.

As the employer you should be familiar with the rules of 29 CFR 1910.178(1) as well as ANSI/ITSDF B56.1 for the user. You should also be aware of any state OSHA rules that may differ from the federal rules.

THE FOLLOWING WARNING IS PROVIDED PURSUANT TO CALIFORNIA HEALTH & SAFETY CODE SECTIONS 25249.5 ET. SEQ.

WARNING

California Proposition 65

This product contains and emits
chemicals known to the
State of California to cause cancer,
birth defects and other reproductive harm.

WARNING

An important message for the operator (for North America)

- **Do not operate this truck unless you are trained and authorized by your employer. Improper operation may result in a serious or fatal injury to yourself or others. Make sure that you read and fully understand the Operator's Manual supplied with this truck. Failure to follow all instructions in this manual could be a violation of the Occupational Safety and Health Act.**

A WORD TO UNICARRIERS FORKLIFT OPERATORS

This Original Manual describes operating procedures, daily checks and simple maintenance for safe usage of your UniCarriers industrial truck. We urge you to read this manual carefully before operating a UniCarriers industrial truck to familiarize yourself with the safety instructions. An operator of any industrial truck should maintain safety as the number one priority at all times. In addition, we strongly recommend that you obtain and read the Industrial Truck Standards Development Foundation (ANSI/ITSDF) B56.1 Manual entitled “Safety Standard for Low Lift and High Lift Trucks” before operating any industrial truck. These instructions will not only reduce mechanical issues with a forklift, but may also save a life.

Contact your Local Authorized Dealer to keep your industrial truck in peak operating performance. If you encounter any problems with a UniCarriers industrial truck, contact your Local Authorized Dealer and request a complete checkup. The dealership will ensure that your forklift is serviced in accordance with the latest factory approved methods.

This manual is not a training manual, it is a guide to help trained and authorized operators safely operate this forklift. Please consult your employer for proper training on the appropriate use of this forklift while performing your job. Illustrations in this manual will show the operator the correct procedures for checking, starting, operating and stopping this forklift.

OSHA 1910.178 requires that only trained and authorized operators use powered industrial trucks.

All information, specifications and illustrations in this manual are based on the latest data obtainable at the time of publication. UniCarriers Americas Corporation, hereafter referred to as UCA, reserves the right to make changes or improvements at any time without notice.

This Operator’s Manual has been prepared on the assumption that your forklift is fully equipped (including all optional equipment). Thus, if you have any questions regarding equipment, please contact your Local Authorized Dealer.

©2015 UniCarriers Americas Corporation
240 N. Prospect Street
Marengo, IL 60152 USA

TRUCK MODIFICATIONS

Unauthorized forklift modification is not permitted.

Per OSHA 1910.178, no modifications or alterations to a powered industrial truck, which may affect capacity, stability or safe operation of the forklift shall be made without the prior written approval of UniCarriers Americas Corporation [UCA], its authorized representative or a successor thereof.

After receiving the approval of UniCarriers Americas Corporation, its authorized representative or a successor thereof, the data & capacity plate, decals, tags, operation and maintenance manuals shall also be changed appropriately.

Only in the event that UniCarriers Americas Corporation is no longer in business and there is no successor to the business, the user may arrange for a modification or alteration to a powered industrial forklift, provided however, that the user shall:

a. Arrange for the modification or alteration to be designed, tested and implemented by an engineer(s) expert in industrial forklifts for their safety;
b. Maintain a permanent record of the design, test(s) and implementation of the modification or alteration;
c. Approve and make appropriate changes to the data & capacity plate(s), decals, tags, and operation and maintenance manuals;
d. Affix a permanent and readily visible label to the forklift stating the manner in which the forklift has been modified or altered together with the date of the modification or alteration, and the name and address of the organization that performed the modification or alteration.

TABLE OF CONTENTS

SUBJECT	PAGE
Warnings	1
A Word to UniCarriers Forklift Operators	3
Truck Modifications	4
Introduction	7
Maintenance and Servicing	7
Daily Inspections	7
Planned Maintenance	7
How to use this Manual	8
Safety Signs and Safety Messages	9
Warning Symbols & Levels	9
Safety Rules and Practices	
Operator Qualifications	10
Personal Protective Equipment for Operating Forklift	10
Daily Inspection	11
Operator Responsibility	11
General	12
No Riders	14
Traveling	14
Loading	17
Dockboards (Bridge Plates), Trucks and Railroad Cars	18
Surface & Capacity	19
Position of Data & Capacity Plates and Decals	19
Data & Capacity Plates and Decals	
Data Plate	22
Identification Numbers	22
Warning Drive Decal (Trained and Authorized)	23
Battery Gate Decal	23
Pinch Point Decal	23
No Riding Decal - 2W1	24
Accessory Pole Decal - Option 2W2	24

TABLE OF CONTENTS

SUBJECT	PAGE
Safety Rules and Practices	
Data & Capacity Plates and Decals (cont'd)	
Coast Control Decal - Option 2W2	24
Solenoid Coast Control Decal - Option 2W2	24
Operating Controls and Functions	
Applications	25
Application Area for UniCarriers Trucks	25
Prohibited Applications for UniCarriers Trucks	25
Main Components	26
Steerhead and Tiller Assembly	
Safety Reverse Button	27
Horn Button	27
Lift Button	27
Lower Button	27
Rotary Thumb Controls	28
Steer Tiller	28
Electronic Activated Coast Control (Click and Coast) Switch Option - 2W2	30
Sidetracker Option - 2W2	31
High Speed Handle - 2W2	
Lift Button	33
High Speed Button	33
Lower Button	33
Horn Button	33
Cruise Control Option	33
Ignition Switch and Meter Panel	
Ignition Switch	34
MDI (Multi-Function Digital Display)	34
Optional Multi-Function LCD Display	35

SUBJECT	PAGE
Operating Controls and Functions (cont'd)	
Operator's Platform - 2W2	
Optional Extended Operator's Platform	41
Load Carrying Mechanism	
Optional Load Backrest Extensions	42
Optional Auto Lift	44
Accessory Pole Option - 2W2	45
Operating the Truck	
Inspection before Operating	46
Operating Precautions	46
Precautions for Operating in Cold Storage	46
Condensation	46
Recommendations to Avoid Condensation	47
Operational Procedures	47
Stopping and Parking the Truck	49
General Care and Maintenance	
Battery and Battery Charging Equipment	50
Battery Care and Maintenance	50
Battery Replacement	52
Battery Chargers	52
Battery Charge Classifications	53
Charging Preparations	54
How to Charge Battery (Off-Forkift Type)	55
Battery Gate Switches (Option)	55
Daily Inspection	56
Operator's Daily Checklist (Sample)	57
Maintenance and Inspection	
Hydraulic Oil Level	58
Refilling Hydraulic Oil	58
Tire Replacement	58

TABLE OF CONTENTS

SUBJECT	PAGE
General Care and Maintenance (cont'd)	
Maintenance and Inspection (cont'd)	
Tire Assembly Installation	59
Fork Inspection	60
Fork Repair	60
Checking Horn	60
Checking Lights (Option)	60
Checking Safety Start System Operation	60
Fuses	60
Periodic Maintenance and Lubrication Schedule	61
Lubrication Chart	65
Putting Forklift in Storage	
Daily Storage	66
Storage over a Long Period of Time	66
Pre-Storage Servicing	66
Servicing the Forklift in Storage	66
Post-Storage Servicing	67
Specifications	
Model Variation (Long Model Code) Breakdown	68
Main Truck	69
Aisle	70
Oil Capacity	72
Index	73

INTRODUCTION

UniCarriers model 2W1/2W2 series industrial trucks meet all applicable requirements of ITSDF B56.1 at the time of manufacture. UCA will not assume, and expressly disclaims, any liability for injuries or damage arising from or caused by the removal, disconnection or disengagement of any part from any of its forklifts. UCA recommends that all replacement parts be of OEM (original Equipment Manufacture) origin.

UCA would like to take this opportunity to thank you for purchasing our product. Your UniCarriers industrial truck was carefully designed and manufactured to ensure maximum reliability, ease of service and reasonable cost for our customers. The purpose of this guide is to introduce and familiarize you, the operator, with the controls and features of the unit.

This manual will help you learn how to operate your powered industrial truck. This manual describes the controls, their function and some special features which may be installed on the unit. UniCarriers industrial trucks are built to work hard but not for misuse and/or abuse.

MAINTENANCE AND SERVICING

UniCarriers industrial trucks are built to be dependable, but as with any industrial truck, they are only as efficient as the operator and the persons responsible for maintaining them. It is essential to keep your lift truck in good operating condition by following a recommended maintenance schedule. A damaged lift truck is a potential source of danger to the operator, and to other personnel around it.

DAILY INSPECTION

OSHA 1910.178 requires a daily or per shift inspection. Before operating a lift truck it should always be inspected by the operator. This procedure is detailed in the “Daily Inspection” (refer to page 56) and the “Operator’s Daily Checklist Sample” (refer to page 57).

PLANNED MAINTENANCE

A Periodic Planned Maintenance program is used in addition to the daily inspection of the lift truck and is performed by a trained and authorized mechanic. Planned Maintenance (PM) provides the opportunity to do a thorough inspection of the operating system and safety condition of your lift truck. This can reduce unscheduled downtime by doing necessary adjustments and repairs. Our dealers are ready to help you with a Planned Maintenance Program by trained service personnel (refer to page 61).

HOW TO USE THIS MANUAL

Included in this manual are the essentials of safe forklift operation, truck features and functions and explanation of how to maintain your lift truck. This manual is organized as follows:

SAFETY RULES AND PRACTICES

Safety rules and major operating hazards you could encounter while operating a lift truck.

OPERATING CONTROLS AND FUNCTIONS

Description of each major component of the 2W1/2W2 series forklifts and how the instruments, gauges, and controls operate.

OPERATING THE TRUCK

Details of safe and efficient operating procedures.

GENERAL CARE AND MAINTENANCE

Care and planned maintenance of the battery, forklift, forks and options.

SPECIFICATIONS

Truck specifications.

The operating instructions in this guide do not replace any other rules or laws of safety that are used in or required by federal, state, local agencies or your own operational area. The operating practices listed do not follow any order of importance but are all to be learned and used in your daily operation. Make sure that your truck is correctly equipped for use in your work area according to these rules or laws.

There may be certain hazards that may not or cannot be avoided solely by mechanical means in the everyday use of material handling trucks. Only the intelligence, good judgement and care of the operator, along with proper planned maintenance, will help assure that the unit operates correctly. It is important to have only trained, reliable personnel operating material handling trucks. Operate your lift truck safely; careful driving is your responsibility. Drive defensively and think about the safety of people who are working nearby. Know your truck's capabilities and limitations.

UCA recommends that this Operator's Manual be kept with the unit at all times or in a location easily accessed by the operator. If a replacement manual is needed, please contact your Local Authorized Dealer and a replacement will be sent for a nominal fee.

SAFETY SIGNS AND SAFETY MESSAGES

Safety signs and Safety messages are placed in this manual and on the truck to provide instruction and identify specific areas where potential hazards exist and special precautions should be taken. Know and understand the meaning of these instructions, signs and messages. Damage to the truck, death or serious injury to you or other persons may result if these messages are not followed. If warning decals are damaged, they must be replaced.

WARNING SYMBOLS & LEVELS

Always follow the warnings in this Operator's Manual and any located on the truck to help avoid accidents and/or injuries from occurring.

WARNING LEVELS

Warning text is given three levels and provides information on the risks, describes the consequences and instructs how to avoid accidents

DANGER

- **Indicates an imminently hazardous situation which, if not avoided, will result in death or serious injury.**

WARNING

- **Indicates a hazardous situation which, if not avoided, could result in death or serious injury.**

CAUTION

- **Indicates a hazardous situation which, if not avoided, may result in minor or moderate injury.**

SAFETY RULES AND PRACTICES

OPERATOR QUALIFICATIONS

WARNING

- **Operator must be trained, evaluated and authorized to drive the forklift and must understand safety techniques and rules for forklift operation.**
- **Under OSHA regulations in the U.S., all operators must be formally trained and tested. These tests must be about basic forklift knowledge and in the operators work environment. Refer to OSHA regulations or you may also contact the Industrial Truck Standards Development Foundation (ANSI/ ITSDF) 1750 K Street NW, Suite 460, Washington, DC 20006 and request a copy of B56.1 Safety Standard for Power Industrial Trucks "Section for the User".**

PERSONAL PROTECTIVE EQUIPMENT FOR OPERATING FORKLIFT

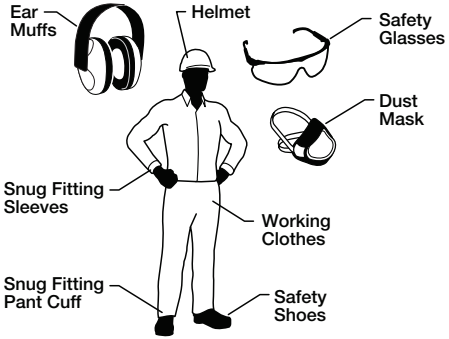

WARNING

- **For operation of the forklift, the protective equipment for the operator shall be dependent upon the conditions of use and the applicable provisions of the local laws and regulations.**
- **The working clothes worn by the operator shall be such that sleeves and cuffs fit snugly so as to prevent them from getting caught on forklift levers, etc. Personal Protective Equipment such as safety glasses, earmuffs, dust mask, helmet (hard hat) and safety shoes should also be worn, as required by the work environment, employer or local and state regulations.**

SAFETY RULES AND PRACTICES

DAILY INSPECTION

WARNING

- **OSHA 1910.178 requires a daily or per shift inspection. Inspect the forklift before operating. Do not operate the forklift if it is in need of repair. If it is in need of repair, tag the forklift, remove the key, if equipped, and report the condition to the proper authority. Do not attempt repair unless you are trained and authorized to perform repairs (refer to “Daily Inspection” on page 56 and "Operator's Daily Checklist Sample" on page 57).**

OPERATOR RESPONSIBILITY

WARNING

- **Safe operation is the responsibility of the operator.**
- **The operator shall develop safe working habits and also be aware of hazardous conditions in order to protect himself, other personnel, the truck, and material being handled.**
- **The operator shall be familiar with the operation and function of all controls and instruments before undertaking to operate the truck.**
- **Before operating any truck, operators shall have read and be familiar with the operator’s manual for the particular truck being operated and they shall also abide by the safety rules and practices.**
- **Before operating any truck, the operator shall be familiar with unusual operating conditions that may require additional safety precautions or special operating instructions.**

SAFETY RULES AND PRACTICES

GENERAL

WARNING

- **Use 3-point contact when mounting or dismounting a truck when the operator's compartment floor height is 300 mm or higher. Maintain contact with one hand and two feet or two hands and one foot at all times. Keep hands free of items (i.e. food, beverage, tools).**
- **Before starting to operate the truck conduct daily inspection.**
- **Do not start or operate the truck, any of its functions or attachments, from any place other than from the normal operator's position.**

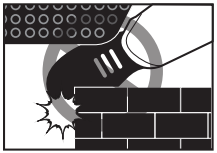

WARNING

- **Keep hands, feet and other parts of your body inside the operating area. Do not put any part of the body outside the operator's area of the truck.**

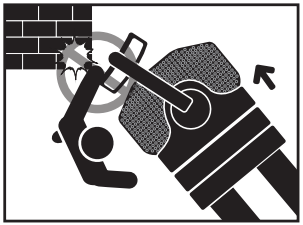

- **Understand truck limitations and operate the truck in a safe manner so as not to cause injury to personnel. Safeguard pedestrians at all times.**
  a. Do not drive a truck up to anyone standing in front of an object.
  b. Ensure that personnel stand clear of the rear swing area before conducting turning maneuvers.
  c. Exercise particular care at cross aisles, doorways, and other locations where pedestrians may step into the path of travel of the truck.

SAFETY RULES AND PRACTICES

GENERAL (cont'd)

WARNING

- **A powered industrial truck is unattended when the operator is more than 8m (25ft) from the truck, which remains in his view, or whenever the operator leaves the truck and it is not in his view.**
- **Before leaving the operator's position:**
  a. Bring truck to a complete stop.
  b. Place directional controls in neutral (steerhandle in the vertical [upright] position), which will apply the parking brake.
  c. Lower load-engaging means fully.
  d. Turn the ignition switch off.
  e. If unit is unattended remove the key, if equipped.
- **Maintain a safe distance from the edge of ramps, platforms, and other similar working surfaces. Do not move railroad cars with a powered industrial truck.**
- **When powered industrial trucks are driven on and off highway trucks or trailers, the brakes on the highway trucks or trailers shall be applied, and wheel chocks or other positive mechanical means shall be used to prevent unintentional movement.**
- **Whenever powered industrial trucks are driven on and off semitrailers not coupled to a tractor, supports may be needed to prevent upending or corner dipping.**
- **Provision shall be made to prevent railroad cars from being moved during loading and unloading. Wheel stops, hand brakes, or other recognized positive means shall be used to prevent movement of railroad cars during loading and unloading.**

WARNING

- **Care shall be taken not to contact obstructions with any part of forklift such as lights, wiring, pipes, racking, etc.**

- **A load backrest extension shall be used when necessary to guard against a load, or part of it, from falling toward the operator.**
- **In areas classified as hazardous, use only trucks approved for use in those areas.**
- **Report all accidents involving personnel, building structures, and equipment to the supervisor or as directed.**
- **Do not block access to fire aisles, stairways, or fire equipment.**

SAFETY RULES AND PRACTICES

NO RIDERS

WARNING

- **Do not permit riders on any part of the truck at any time. The operator is the only one who should be on a truck.**
- **Do not sit on the forks (when loaded or not) or get under the forks or operator's platform.**

TRAVELING

WARNING

- **Observe all traffic regulations including authorized plant speed limits. Under normal traffic conditions, keep to the right. Maintain a safe distance, based on speed of travel, from the truck ahead; and keep the truck under control at all times.**
- **Yield the right of way to pedestrians and emergency vehicles such as ambulances and fire trucks.**
- **Do not pass another truck traveling in the same direction at intersections, blind spots, or at other dangerous locations.**
- **Slow down and sound the audible warning device(s) at cross aisles and other locations where vision is obstructed.**
- **Keep a clear view of the path of travel and observe for other traffic, personnel, and safe clearances.**
- **If the load being carried obstructs forward view, travel in the opposite direction.**

TRAVELING (cont'd)

WARNING

- **When descending a grade, stopping distance will be greater than on-level operation. Methods shall be provided to allow for this condition. Some methods are: reduce speed, limit loads, allow adequate clear space at the bottom of grade, etc.**

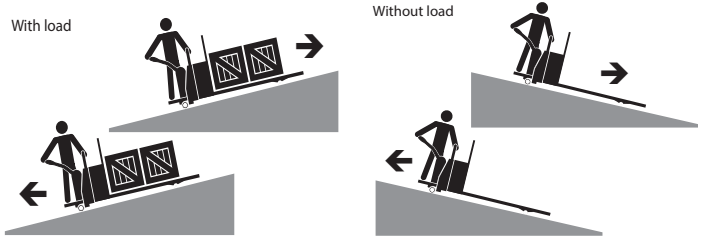

WARNING

- **Ascend or descend grades slowly, and with caution.**
  - When ascending or descending grades, loaded rider trucks shall be driven with the load upgrade.
  - Unloaded trucks should be operated on all grades with the load-engaging means downgrade.
  - On all grades the load and load-engaging means shall be fully raised.

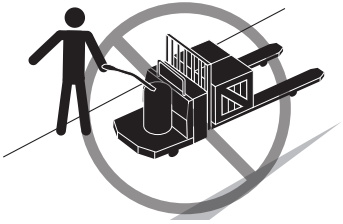

  - Avoid turning, if possible, and use extreme caution on grades, ramps, or inclines; normally travel straight up and down.

TRAVELING (cont'd)

WARNING

- **Under all travel conditions, operate the truck at a speed that will permit it to be brought to a stop in a safe manner.**
- **Travel with load-engaging means fully raised.**
- **Make starts, stops, turns, or direction reversals in a smooth manner so as not to cause unsafe conditions.**

- **Do not indulge in stunt driving or horseplay.**
- **Slow down for wet and slippery floors.**

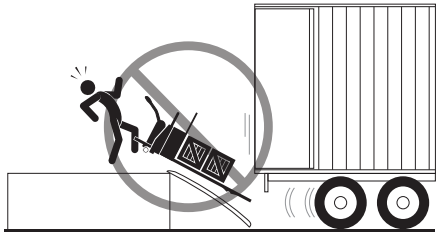

WARNING

- **Before driving over a dockboard or bridge plate, be sure that it is properly secured. Drive carefully and slowly across the dockboard or bridge plate, and never exceed its rated capacity.**
- **Do not drive trucks onto any elevator unless specifically authorized to do so. Do not exceed the capacity of the elevator. Approach elevators slowly, and then enter squarely after the elevator car is properly leveled. Once on the elevator, neutralize the controls, shut off power, and set brakes. It is advisable that all other personnel leave the elevator before truck is allowed to enter or leave.**
- **Avoid running over loose objects on the driving surface.**
- **When negotiating turns, reduce speed to a safe level consistent with the operating environment. Make the turns smoothly. Except when maneuvering at a very low speed, turn the steering control at a moderate, even rate.**

LOADING

WARNING

- **Handle only stable or safely arranged loads.**
  a. When handling off-center loads that cannot be centered, operate with extra caution.

  b. Handle only loads within the capacity of the truck.
  c. Handle loads exceeding the dimensions used to establish truck capacity with extra caution. Stability and maneuverability may be adversely affected.
  d. Handle loads only with the load engaging means and do not transport loads or miscellaneous items with the operator's compartment or other areas of the truck.

WARNING

- **Completely engage the load with the load-engaging means. Fork length should be at least two-thirds of load length.**

SAFETY RULES AND PRACTICES

DOCKBOARDS (BRIDGE PLATES), TRUCKS AND RAILROAD CARS

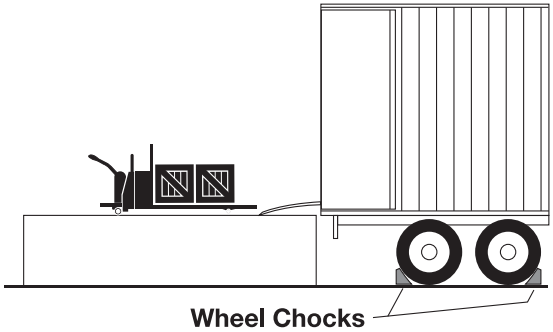

WARNING

- **Portable and powered dockboards shall be marked conspicuously (in plain sight) with their carrying capacity. The carrying capacity indicated shall not be exceeded.**
- **Portable dockboards shall be secured in position, either by being anchored or by being equipped with devices that will prevent unexpected movement.**
- **Handholds or other effective means shall be provided on portable dockboards to permit safe handling. When possible, fork loops or lugs shall be provided for handling by fork trucks.**

WARNING

- **All types of dockboards shall have a high friction surface designed to reduce the possibility of employees or trucks slipping and shall be designed and maintained so that one end will have a substantial contact with the dock (or loading platform) and the other end with the transport vehicle to prevent the dockboard from rocking or sliding.**
- **When powered industrial trucks are driven on and off highway trucks or trailers, the brakes on the highway trucks or trailers shall be applied, and wheel chocks or other positive mechanical means shall be used to prevent unintentional movement of highway trucks and trailers.**
- **Provision shall be made to prevent railroad cars from being moved during loading and unloading. Wheel stops, hand brakes, or other recognized positive means shall be used to prevent movement during loading and unloading.**
- **Whenever powered industrial trucks are driven on and off semitrailers not coupled to a tractor, supports may be needed to prevent upending or corner dipping.**
- **Maintain a safe distance from the edge of ramps, platforms, or other similar working surfaces.**
- **Do not move railroad cars or trailers with a powered industrial truck.**

SURFACE & CAPACITY

WARNING

- **The 2W1/2W2 models must be used on only smooth, solid floor conditions. The following conditions should be avoided at all times.**

  -Sand -Gravel
  -Oil -Ice
  -Mud -Unstable surfaces

- **Operating the truck on these surfaces may cause dangerous conditions for the operator, other personnel and equipment.**

POSITION OF DATA & CAPACITY PLATES AND DECALS

WARNING

- **When data & capacity plates or warning & caution decals are damaged such that they cannot be read or have peeled off, they should be immediately replaced with new ones to ensure that they are constantly maintained in a legible condition. The plates and decals are available from your Local Authorized Dealer.**

- **The warning and caution decals are affixed to the designated locations of the forklift as shown in the figure on pages 20 & 21. Before operating the forklift, be sure to take note of the details given in the decals so as to ensure proper and safe operation.**

SAFETY RULES AND PRACTICES

POSITION OF DATA & CAPACITY PLATES AND DECALS

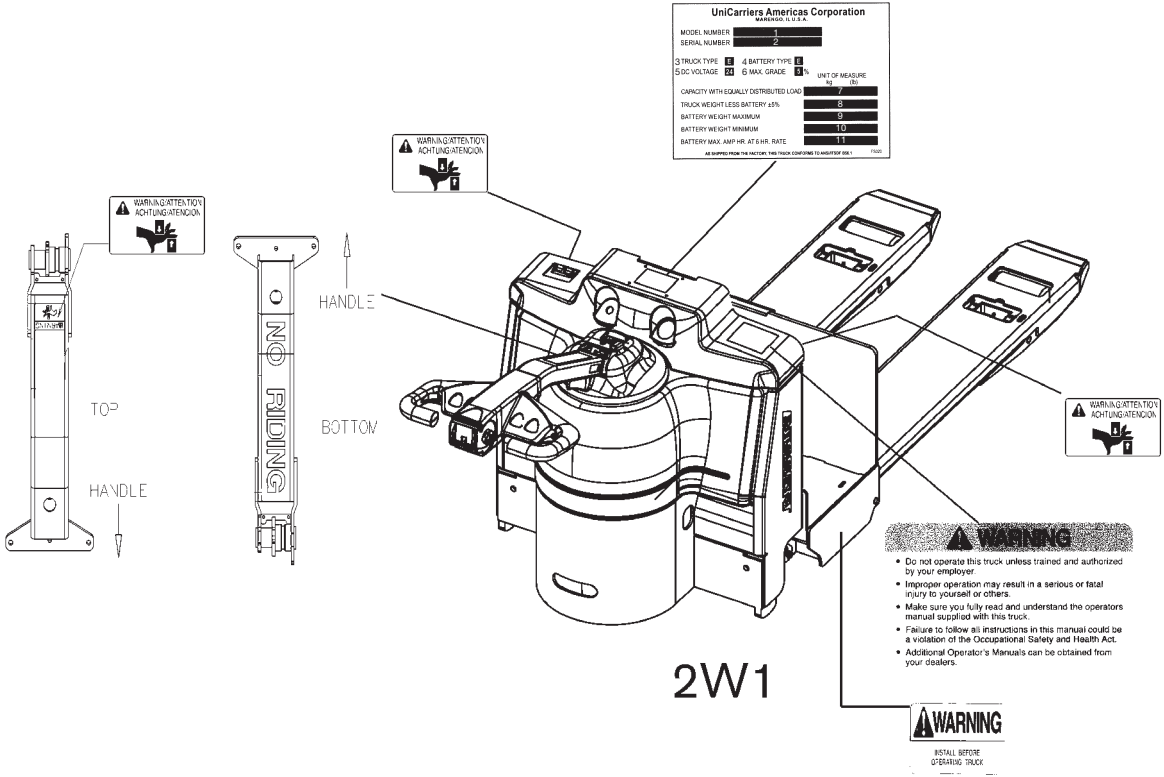

SAFETY RULES AND PRACTICES

POSITION OF DATA & CAPACITY PLATES AND DECALS

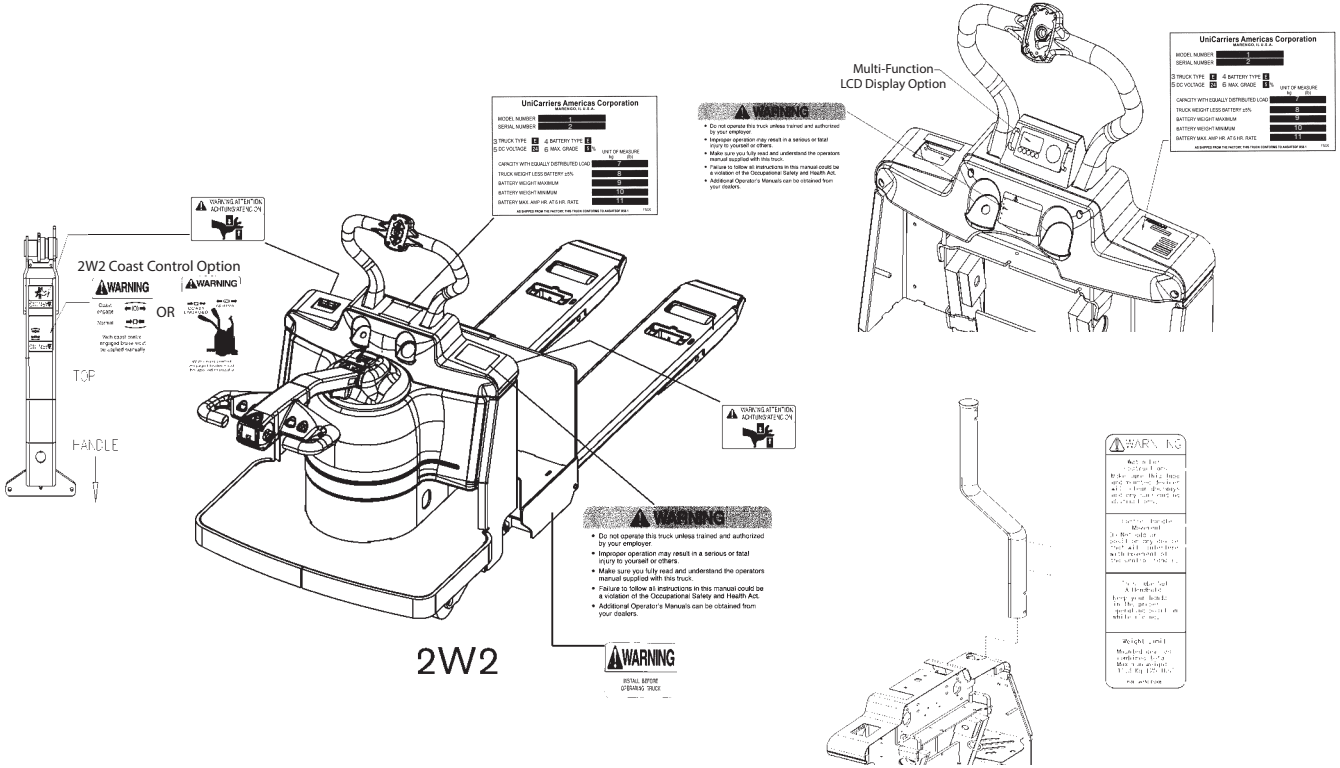

SAFETY RULES AND PRACTICES

DATA & CAPACITY PLATES AND DECALS

Know your unit. The data plate indicates all necessary information regarding the type of attachments, lifting capacity, etc. Always check the unit's data plate and understand areas 1 through 11 as shown in the illustration below.

Data Plate

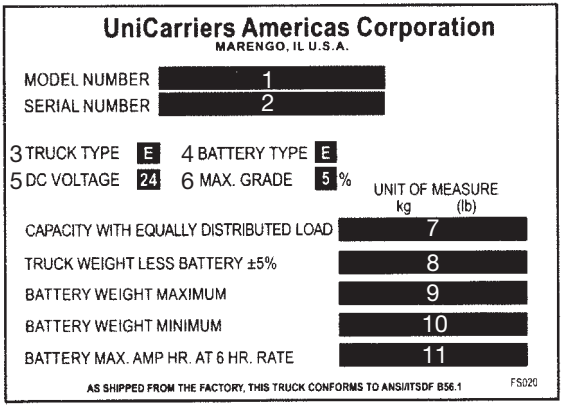

1. Model Number
2. Serial Number
3. Truck Type
4. Battery Type
5. Battery Voltage
6. Percent of Grade
7. Truck Capacity
8. Truck Weight Less Battery
9. Maximum Battery Weight
10. Minimum Battery Weight
11. Battery Maximum Amp Hours

Actual Capacity will vary with forklift configuration and load center. These values are stamped on the data plate.

WARNING

- **Do not exceed the actual capacity of the forklift. Note the specifications of the forklift you are using and operate the forklift accordingly.**

Knowing the model and serial number for this unit are very helpful whenever ordering repair parts. For any further information and specifications on this unit or any other, contact your Local Authorized Dealer.

Identification Numbers

The serial number with short model code is stamped in the frame near the transmission.

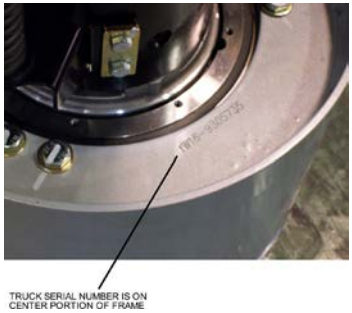

Truck Serial Number

2W16	-	93XXXXX	2W18	-	93XXXXX
2W26	-	93XXXXX	2W28	-	93XXXXX

DATA & CAPACITY PLATES AND DECALS (cont'd)

Warning Drive Decal (Trained and Authorized)

WARNING

- Do not operate this truck unless trained and authorized by your employer.
- Improper operation may result in a serious or fatal injury to yourself or others.
- Make sure you fully read and understand the operators manual supplied with this truck.
- Failure to follow all instructions in this manual could be a violation of the Occupational Safety and Health Act.
- Additional Operator's Manuals can be obtained from your dealers.

WARNING

- **Operator must be trained and authorized to drive the forklift, and must understand safety techniques and rules for the forklift operation.**
- **Make sure that you read and fully understand the Operator's Manual supplied with this forklift. Failure to follow all instructions in this manual could be a violation of the Occupational Safety and Health Act.**

Battery Gate Decal

WARNING

INSTALL BEFORE
OPERATING TRUCK

WARNING

- **Battery gates must be installed before operating the truck.**

Pinch Point Decal

Label part No. 97836 FK100

WARNING

- **This decal instructs the operator to keep fingers away. Do not reach into the lifting mechanism area or by the battery compartment. Personal injury may occur if any part of your body is between moving parts of the unit.**

DATA & CAPACITY PLATES AND DECALS (cont'd)

No Riding Decal - 2W1 Only

WARNING

- **This decal instructs the operator that no personnel should be riding on the unit.**

Accessory Pole Decal - Option 2W2 Only

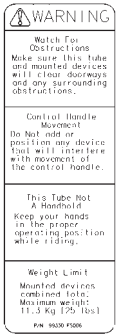

WARNING

- **This decal instructs the operator to watch for obstructions, do not position any device that will interfere with movement of control handle, tube is not a handhold and maximum weight limit.**

Coast Control Decal - Option 2W2 Only

WARNING

- **This decal instructs the operator that when coast control is engaged, the brake will be released and must be manually applied. Manually applying the brake requires the operator to fully raise or lower the tiller handle (refer to page 29).**

Solenoid Coast Control Decal - Option 2W2 Only

WARNING

- **This decal instructs the operator that when coast control is engaged, the brake will be released and must be manually applied. Manually applying the brake requires the operator to fully raise or lower the tiller handle (refer to page 30).**

OPERATING CONTROLS AND FUNCTIONS

APPLICATIONS

The 2W1/2W2 share many of the same controls and frame parts, but have different operation functions. The 2W1 can only be operated in a walkie mode and the 2W2 can be operated in both the walkie and riding mode. The truck is available in different fork lengths and lifting heights. Refer to the truck's data plate for this information.

The trucks are equipped with a 24 Volt electrical system. Travel and lifting speeds are transistor controlled to provide smooth operations. In addition, the travel function and the different hydraulic functions have additional controls which further enhance these features. Different speeds can be set by a trained service technician.

APPLICATION AREA FOR UNICARRIERS TRUCKS

UniCarriers industrial trucks are solely designed and manufactured to handle goods. The truck should only be fitted with the appropriate accessories relevant to the application.

PROHIBITED APPLICATIONS FOR UNICARRIERS TRUCKS

It is not permitted to use these trucks for other purposes including the following:

WARNING

- **Do not operate in areas that contain gases which can cause fire or explosions**
- **Do not use as a towing truck for trailers**
- **Not to be used for pushing applications**
- **Do not tow other lift trucks**
- **Do not transport or lift passengers**
- **Do not drive on any non-paved areas (refer to page 19)**

OPERATING CONTROLS AND FUNCTIONS

MAIN COMPONENTS

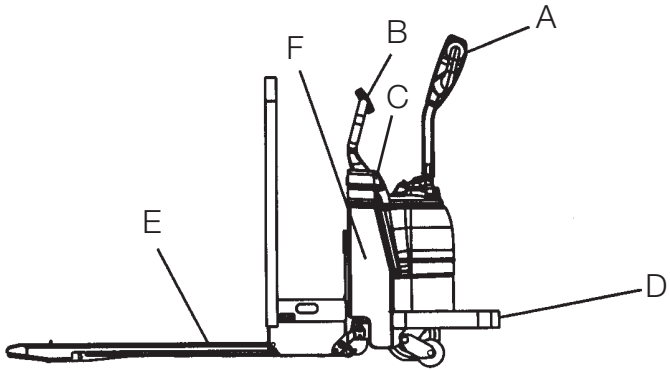

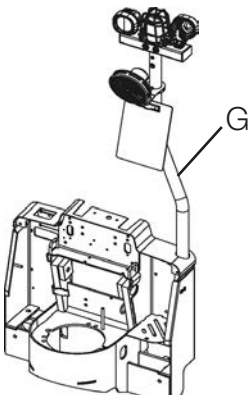

A. **Steerhead and Tiller Assembly:** This assembly controls the steering and speed.
B. **High Speed Handle - 2W2 Only:** Primarily used for a hand hold for the operator to grasp while operating the unit from the operator's platform.
C. **Ignition Switch and Meter Panel:** Location of ignition switch, standard MDI and optional multi-function LCD display.
D. **Operator's Platform - 2W2 Only:** Provides a stable platform for the operator to operate the unit in rider mode.
E. **Load Carrying Mechanism:** Used to carry rated loads not people. Includes backrest, forks and load wheels.
F. **Power Head Frame:** Houses the transmission, motor and electronics.
G. **Accessory Pole Option - 2W2 Only:** Used to attach accessory work options.

OPERATING CONTROLS AND FUNCTIONS

STEERHEAD AND TILLER ASSEMBLY

1. Safety reverse button
2. Horn button
3. Lift button
4. Lower button
5. Rotary thumb controls
6. Steer tiller
7. Electronic activated coast control switch (optional 2W2 only)
8. Sidetracker button (optional 2W2 only)

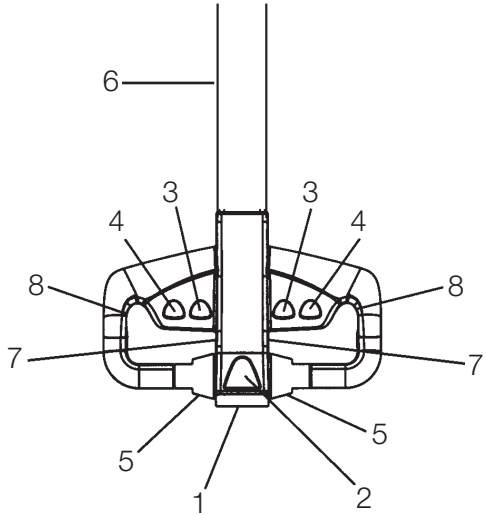

SAFETY REVERSE BUTTON

This red button is provided to reverse the travel direction should the operator get caught between the steerhead and a fixed object. If the button contacts the operator, the truck will reverse and move away from the operator at full throttle for about one second and then reduce to slow speed as long as the button is depressed. This button will override all forward travel.

HORN BUTTON

Pushing the button located on top of the steering control handle will sound the horn, regardless of key position.

LIFT BUTTON

Lifting (raising the load carrying mechanism) is controlled by pushing down on the lift button, either side of steerhead. This device will continue to raise as long as the button is depressed or until the load carrying mechanism activates the lift limit function. Releasing the button will automatically stop the raising.

LOWER BUTTON

Lowering (lowering the load carrying mechanism) is controlled by pushing down on the lower button, either side of steerhead. This device will continue to lower as long as the button is depressed or until the lowering stops are reached. Releasing the button will automatically stop the lowering.

OPERATING CONTROLS AND FUNCTIONS

STEERHEAD AND TILLER ASSEMBLY (cont'd)

ROTARY THUMB CONTROLS

These controls are on either side of the steerhead and control the speed and direction of the unit. Rotating these controls will cause the unit to move in the direction of rotation. The amount of rotation you apply to either control determines the speed of the unit.

- **Controlled reversing can be performed during normal operating conditions to slow down and/or stop an electric powered industrial truck. To activate controlled reversing simply rotate the rotary thumb control from one direction of travel to the opposite direction. The unit should come to a smooth stop. If the operator should continue to hold the rotary thumb control in the changed direction, the unit will begin to accelerate in that new direction. The unit has a de-acceleration mode. This means that any time the operator releases the thumb control the unit will begin to slow down automatically.**

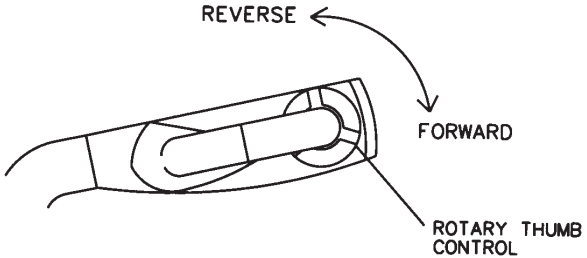

STEER TILLER

The steerhead is connected to the steer tiller. The tiller controls steering direction and brakes.

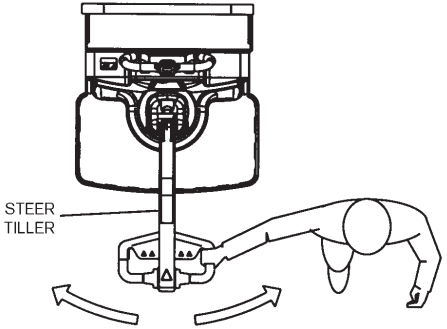

OPERATING CONTROLS AND FUNCTIONS

STEERHEAD AND TILLER ASSEMBLY (cont'd)

STEER TILLER (cont'd)

Braking and Brake Positions

Pulling the steerhead down to mid-range disengages the brake system. There are two ways to apply the brakes, either by pushing the steer tiller to its fully lowered position or by releasing the steer tiller which will return it to the vertical position, applying the brakes.

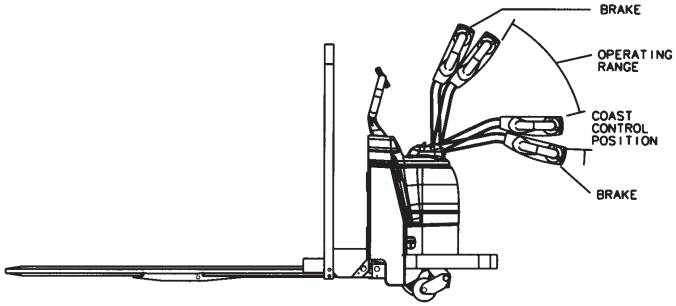

- All walkie and walkie rider units have an electronic brake system. If for any reason the tiller handle or steerhead controls are not operated for approximately three (3) seconds the brake will apply.
- To release brake simply operate the directional control or raise or lower the tiller handle.

Braking by Plugging (Controlled Reversing)

Plugging is a normal operation to slow down and/or stop a powered industrial truck. Braking by plugging is a method in which the rotary thumb control is switched to the opposite direction in which the forklift is traveling (refer to page 28).

Manual Coast Control Option - 2W2 Only

This optional feature allows the truck to coast for more efficient order picking. To engage (activate) this option, the operator must place the handle in coast control position and manually engage the latch, as shown below.

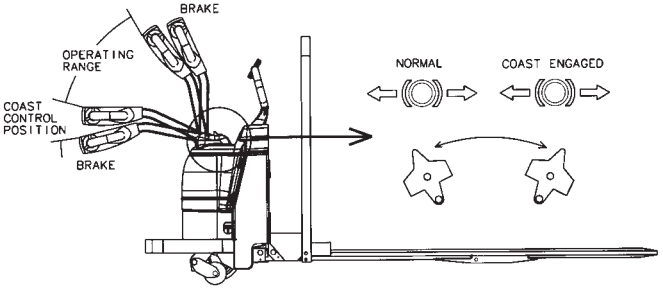

OPERATING CONTROLS AND FUNCTIONS

STEERHEAD AND TILLER ASSEMBLY (cont'd)

ELECTRONIC ACTIVATED COAST CONTROL (CLICK AND COAST) SWITCH OPTION - 2W2 ONLY

This optional feature allows the truck to coast for more efficient order picking. This optional feature will engage (activate) the coast control electronically, with no manual operation. To engage (activate) this option, the operator must place the handle in the coast control position, as shown below. Then depressing either of the soft-touch sealed switches, located on either side of the steerhead as shown below, will actuate the solenoid and engage the steer tiller handle in the coast control position.

Note: You do not have to hold the soft-touch switch in, just depress it once.

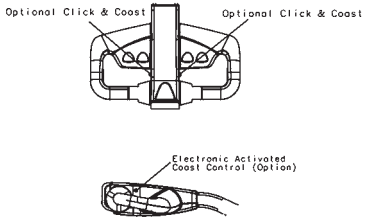

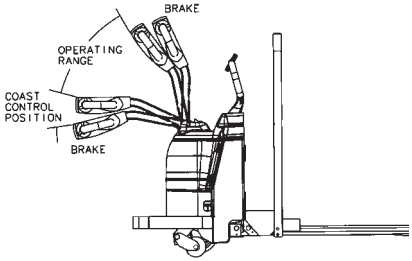

WARNING

- **When coast control is engaged, the service brake must be manually applied by either pushing the tiller handle to its fully lowered position or by releasing the tiller handle which will return it to the vertical position. This will engage the coast control with little effort, allowing the tiller handle to continue up to brake "on" position as seen in the illustration at left.**
- **Do not operate the 2W2 in riding mode (on platform) when coast control is engaged as this requires the operator to manually apply the brake.**

OPERATING CONTROLS AND FUNCTIONS

STEERHEAD AND TILLER ASSEMBLY (cont'd)

SIDETRACKER OPTION - 2W2 ONLY

This optional feature was designed for the operator's convenience when the unit is to be used as an order selector. This system is two options combined so that the unit will coast along side of the operator while items are being picked and loaded onto a pallet.

The first option is coast control, which is described on page 29. This option holds the steer tiller arm from fully raising to apply the brakes automatically. The steer till arm will be held in an operation position (as shown below) so the operator may easily reach the steerhead without having to either bend over or walk in front of the unit. Coast control may be used without the sidetracker option but the sidetracker must be used in conjunction with the coast control in order to function.

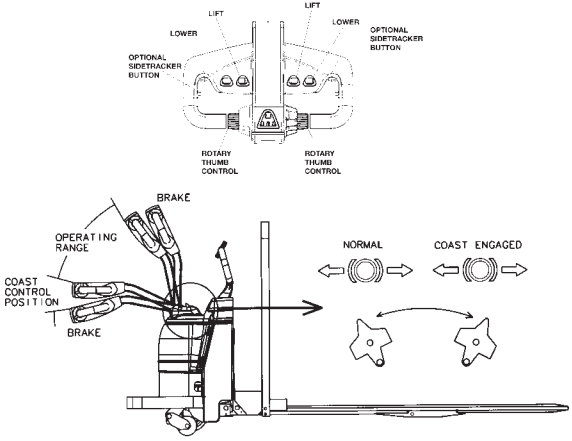

WARNING

- **Before you attempt to operate this unit with the sidetracker option, you must read and fully understand this Operator's Manual and be fully trained in the safe and proper operation of powered industrial trucks.**

CAUTION

- **The operator should test this optional feature in a clear area before attempting to go into the work area or aisle.**

Operation

1. Always pick up pallet(s) and raise the load carrying device (forks) fully before engaging or using coast control and sidetracker option.

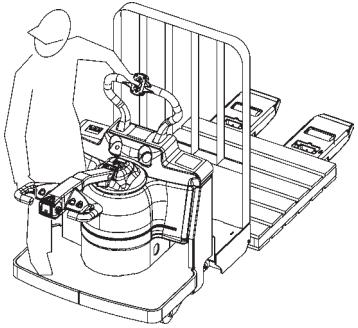

2. Travel to work area or aisle.

OPERATING CONTROLS AND FUNCTIONS

STEERHEAD AND TILLER ASSEMBLY (cont'd)

SIDETRACKER OPTION - 2W2 ONLY (cont'd)

Operation (cont'd)

NOTE:

- The sidetracker may be operated from either side of the unit.
- The sidetracker button can only be depressed for 8-10 seconds continuously.

3. Place steer tiller arm in the coast control position.

WARNING

- **In the coast control position the brakes will not apply automatically, they must be manually applied. Do not park, stop or operate this unit on an incline or ramp without taking the tiller arm out of the coast control position or blocking the wheels.**

4. You may now use the sidetracker option. Remember that this option makes the unit travel only in the forward direction.

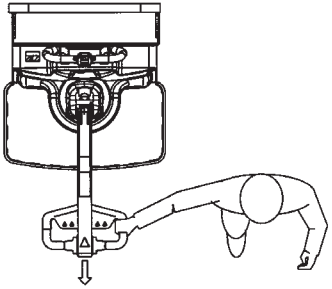

WARNING

- **Always operate this unit from the side when using the coast control or sidetracker option, never from the front. Serious injury could occur.**

5. Firmly hold the steerhandle and apply slight pressure to the sidetracker button using fingers (as shown below).

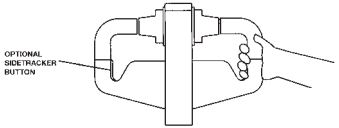

6. This will signal the motor controller to turn on the motor and travel in the forward direction (forks trailing). If you continue to hold either switch the unit will travel for 8-10 seconds. You will then have to reactivate either switch to start traveling again. Any time you release the switch the unit will coast to a stop.

WARNING

- **When operating, always allow enough area in front of unit for coasting. In most instances the operator will only be pushing the sidetracker switches for a few seconds at a time.**

OPERATING CONTROLS AND FUNCTIONS

HIGH SPEED HANDLE - 2W2 ONLY

The high speed handle serves two primary purposes. The first and most essential is a hand hold when the operator is in the riding position (standing on platform) or mounting the unit. The second is to provide some of the functions contained in the steerhead. Therefore the operator can maintain two points of hand contact with the machine while riding and constant eye contact with their path of travel while sounding the horn, when required.

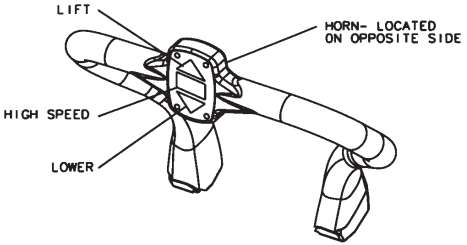

There are four push button controls contained in the high speed handle.

1. Lift button
2. High speed button
3. Lower button
4. Horn button

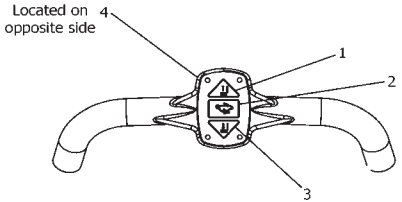

LIFT BUTTON

Depressing this button raises the load carrying mechanism.

HIGH SPEED BUTTON

Depressing this button will give high speed in the rider mode. The high speed button is equipped with anti tape down. This means if the high speed button is held in or taped down before the ignition switch is turned on or before the tiller handle is placed into the driving position, the 2W2 will not go into high speed, but will remain in slow or walking mode.

LOWER BUTTON

Depressing this button lowers the load carrying mechanism.

HORN BUTTON

Depress this button to sound the horn.

WARNING

- **All 2W2 models are set to approximately 3.5 mph empty by government and industry regulations in the walking mode. Do not make any adjustments to this factory setting.**

CRUISE CONTROL OPTION

This optional feature allows the operator from the riding position (standing on platform) to only press the high speed button once after the rotary thumb control has been rotated. The unit will then be able to reach maximum speed using the rotary thumb direction controls. When the operator returns the rotary thumb control to the neutral position, the unit will drop out of high speed until the high speed button is pushed again.

OPERATING CONTROLS AND FUNCTIONS

IGNITION SWITCH AND METER PANEL

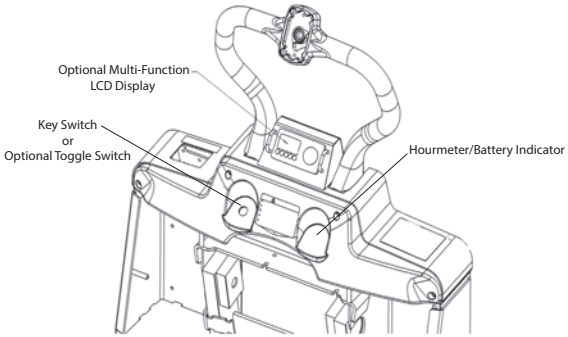

IGNITION SWITCH

The ignition switch must be in the off position to remove the key.

When the ignition switch is in the on position the MDI will display hours in the rectangular LED.

Optional toggle switch has the same on and off positions.

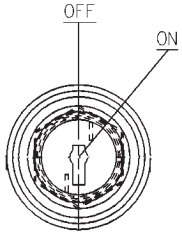

MDI (MULTI-FUNCTION DIGITAL INDICATOR)

This MDI is standard on all units for ease in determining planned maintenance schedules. This meter shows operating hours, low battery and lift lockout. It will indicate low or high speed mode and display fault codes.

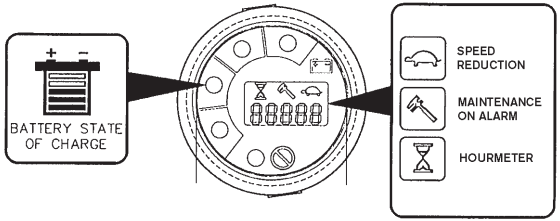

The rectangular LED displays hours from when the ignition switch is first turned on. Then it displays the remaining percentage of charge in the battery and finally it displays fault codes when detected. The GREEN LED is lit when the hour meter is signaled by the line contactor closing. The YELLOW LED (below the battery) is lit when the battery charge level is above 20%. The RED LED (below the wrench) is lit when the unit is going into pump lockout or when a fault is detected.

OPERATING CONTROLS AND FUNCTIONS

IGNITION SWITCH AND METER PANEL (cont'd)

MDI (MULTI-FUNCTION DIGITAL INDICATOR) (cont'd)

Common Error Codes

Code	Indication	Correction
02 66	Low Battery	Change or charge battery as soon as possible.
02 79	Incorrect Start	Pick Switch, AutoCoast or Safety Reverse Button is pressed at key on. Make sure none of the traction buttons are being pressed at key on.
02 79	Incorrect Start on Traction	Code will appear during operation if Safety Reverse Button is pressed (activated).
02 85	Battery Gate (with optional battery gate switch)	Check to see if battery gates are present and installed properly.
05 90	Incorrect Start on Pump	Lift or Lower Button is pressed at key on. Make sure none of the hydraulic function buttons are being pressed at key on.
EP2.03	No Code	Controller software version

OPTIONAL MULTI-FUNCTION LCD DISPLAY

The meter panel consists of two sections: LCD (Liquid Crystal Display) monitor and function keys. The graphic smart display has six built-in red LED's, which provide the operator with visually easy information about the status of some truck devices.

1. Battery
2. Wrench
3. Not used
4. Not used
5. Not used
6. Function Keys
7. LCD Display Indicators and Lamps

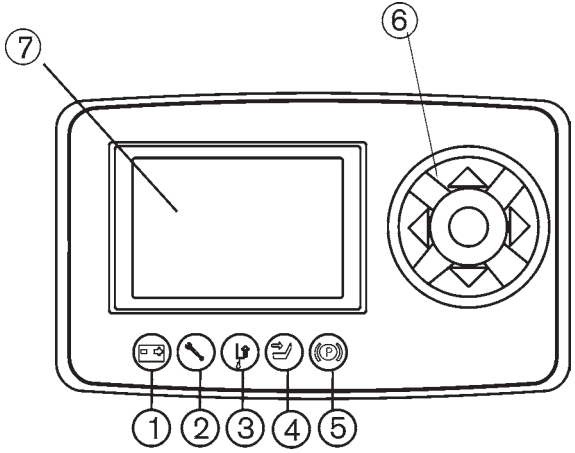

OPERATING CONTROLS AND FUNCTIONS

IGNITION SWITCH AND METER PANEL (cont'd)

OPTIONAL MULTI-FUNCTION LCD DISPLAY (cont'd)

Battery
This LED lights when the measured battery voltage is equal or less than 40% nominal battery voltage.

Wrench
This LED blinks when truck is in alarm condition.

Function Keys
These keys are used to navigate screens and allow for the selection of required mode and to change adjustment values. There are five push buttons PB1, PB2, PB3, PB4 and PB5.

PB1
Used to scroll up a menu or change a value.

PB2
Used to advance into a menu.

PB3
Used to enter or select.

PB4
Used to back out of a menu or to exit without making a change.

PB5
Used to scroll down a menu or change a value.

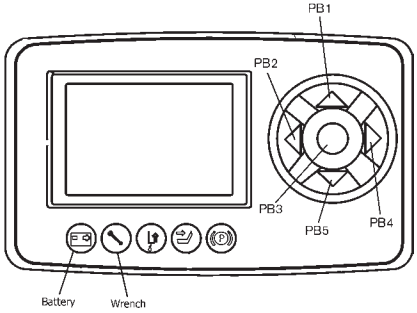

Adjustment Item	Shift to Adjust Mode	Adjustment	Details
Hour Meter	Push PB2 to Enter	Push PB2	Operating Screen → Hour Counter
		Push PB4	Hour Counter → Operating Screen
	Push PB4 to Exit	Push PB5	t-Total Hrs → tr-Traction HM → p-Pump HM
		Push PB1	p-Pump HM → tr-Traction HM → tr-Traction HM
Performance Mode (If Enabled)	Push PB2 Twice to Enter	Push PB2	Operating Screen → Hour Counter → Performance Mode
		Push PB4	M-Manual → H-Hour Counter → Operating Screen
	Push PB4 Twice to Exit	Push PB5	M-Manual → H-High → E-Economy
		Push PB1	E-Economy → H-High → M-Manual

OPERATING CONTROLS AND FUNCTIONS

IGNITION SWITCH AND METER PANEL (cont'd)

OPTIONAL MULTI-FUNCTION LCD DISPLAY (cont'd)

LCD Display Indicators and Lamps

1. Battery Capacity
2. Performance Mode
3. Performance Cut-Back
4. Hour Meter
5. Hour Meter Log
   - t - Total Hours
   - tr - Traction HM
   - p - Pump HM
6. Acceleration Bar Graph
7. Speedometer

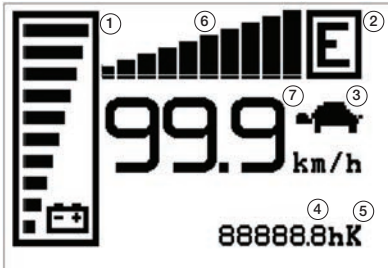

Common Error Codes ECO Display / Meter Panel

Code	Indication	Correction
A66	Low Battery	Change or charge battery as soon as possible.
A79	Incorrect Start	Pick Switch, AutoCoast or Safety Reverse Button is pressed at key on. Make sure none of the traction buttons are being pressed at key on.
A79	Incorrect Start on Traction	Code will appear during operation if Safety Reverse Button is pressed (activated).
A266	Battery Gate (with optional battery gate switch)	Check to see if battery gates are present and installed properly.
A239	Incorrect Start on Pump	Lift or Lower Button is pressed at key on. Make sure none of the hydraulic function buttons are being pressed at key on.

Meter Panel Explanation

When the ignition switch is in the "ON" position, backlighting makes the display clearly visible to the operator. It displays normal operation (battery capacity meter, hour meter, clock, steering wheel angle gauge, speedometer, etc.), malfunction and adjustment data.

1. Battery Capacity
   This meter indicates the remaining charge capacity of the battery. As the remaining capacity decreases, the number of black steps decreases. Before only the last black step remains, discontinue forklift operation and charge the battery. The battery capacity meter has a 10-step display.

CAUTION

- **Continued operation of the forklift with discharged battery may damage the battery and electric parts.**

2. Performance Mode
   Refer to pages 36 and 39.

3. Performance Cut-Back (Turtle Mode [Soft Mode])
   The turtle symbol is normally off; when it appears (fixed) it shows activation of the "soft" mode of the truck, in which maximum speed and acceleration are produced by the controller.

4. Hour Meter
   The number displayed on the bottom right side of the unit shows the hours worked.

OPERATING CONTROLS AND FUNCTIONS

IGNITION SWITCH AND METER PANEL (cont'd)

OPTIONAL MULTI-FUNCTION LCD DISPLAY (cont'd)

Meter Panel Explanation (cont'd)

5. Hour Meter Log
   The letter presence near the hour meter shows which hour meter is displayed.
   t - total operating time of truck traction, pump or traction pump.
   tr - traveling time equal to the total time that the traction motor is operational.
   p - loading time equal to the total time that the pump motor is operational.

Change Hour Meter Total Hours to Pump

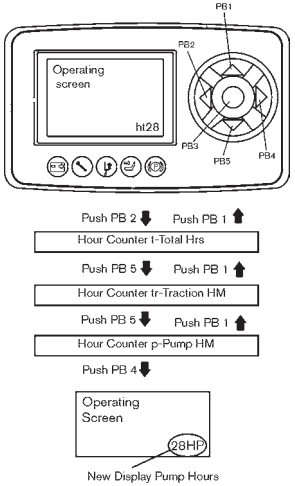

6. Acceleration Bar Graph
   The acceleration level indication is displayed on the central top side of the unit; it is shown by ten notches. When the acceleration level is minimum only a notch is displayed, when the accelerator level is maximum all ten notches are displayed. Each notch represents 1/10 of the difference between.

7. Speedometer
   The number displayed under the accelerator notches on the center of the unit shows the truck speed. The unit can be km/h or mph depending on the "Speed Unit" parameter setting.

Driver Recognition

Contact your Local Authorized Dealer to turn this feature on and set up your driver codes. Once this feature is on and set up they are very easy to enter.

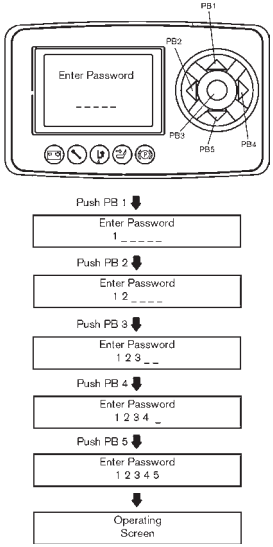

OPERATING CONTROLS AND FUNCTIONS

IGNITION SWITCH AND METER PANEL (cont'd)

OPTIONAL MULTI-FUNCTION LCD DISPLAY (cont'd)

Performance Mode
Factory Default:
Traveling power level

Mode E (Economy): For work requiring operation time to be saved or customers using the unit for a long time.

Mode M (Manual): Use for custom speed setting. Power levels for traveling can be set according to customer request.

Mode H (High-Power): For work or customers requiring higher traveling speed.

Contact your Local Authorized Dealer for more information about how to set Mode M (Manual).

Performance Mode M to Mode H

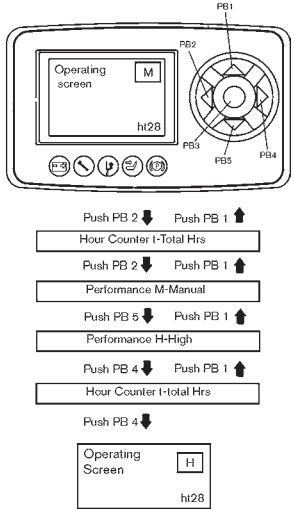

WARNING

- **After performance adjustment, operate the forklift slowly and carefully until you become accustomed to the new performance level. Be especially careful when the performance level has been increased. Higher performance levels can cause loads to shift, fall off or to be unstable during starts, which could result in serious injury or death.**

OPERATING CONTROLS AND FUNCTIONS

IGNITION SWITCH AND METER PANEL (cont'd)

OPTIONAL MULTI-FUNCTION LCD DISPLAY (cont'd)

Malfunctions and Warning Indications

1. LCD (Liquid Crystal Display)
2. Error Code
3. Malfunction Message
4. Battery Warning Mark
5. Exclamation Point

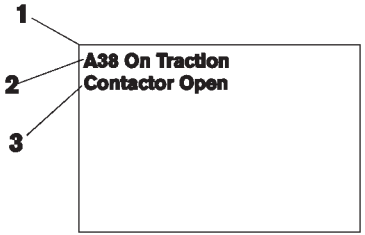

PUSH PB5

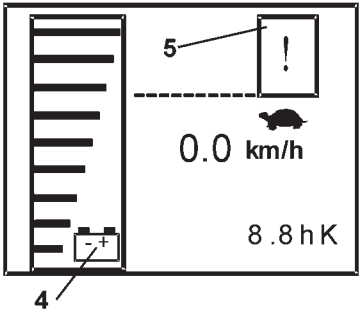

If any malfunction occurs when the ignition switch is in the "ON" position, the LCD will display a message explaining the details of the malfunction.

Note: During forklift operation, periodically check the battery capacity. Make every effort to recharge the battery before the battery low message appears.

Battery Warning Mark

Pump Cut Warning: The bar display will start to flash when the battery capacity meter's remaining capacity indication changes from 4 bars to 3 bars.

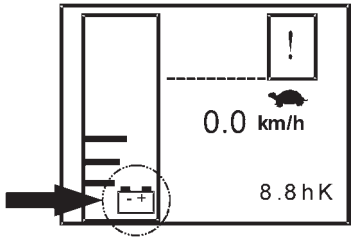

Press PB5

When the battery capacity meter display changes from 3 bars to 2 bars the pump cut/battery low message will be displayed (see above illustration).

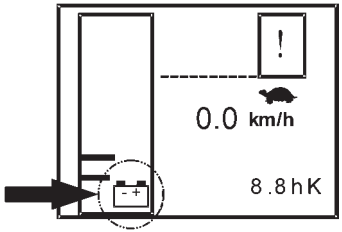

When function key PB4 is pressed the display will switch. The battery capacity meter will now show 2 bars and the battery warning mark will flash. The exclamation point will appear in the top right corner and lift/tilt function will be inoperable. The unit may be operated during pump cut. However, move the unit to a safe location and promptly charge the battery.

OPERATING CONTROLS AND FUNCTIONS

IGNITION SWITCH AND METER PANEL (cont'd)

OPTIONAL MULTI-FUNCTION LCD DISPLAY (cont'd)

Low Voltage Lock Warning

If the vehicle is subjected to continuous operation after the pump cut warning was activated, the low voltage lock warning will be activated. Then, the display will appear as shown at right. The vehicle cannot be operated during the low voltage lock warning.

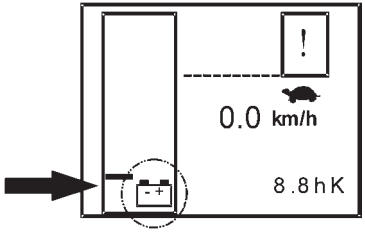

NOTE: The interval between the first appearance of the battery warning mark and interruption of operation is dependent of the charge/condition of the battery.

When a malfunction is indicated, immediately suspend forklift operation. Contact your Local Authorized Dealer for inspection and necessary repair.

WARNING

- **When the malfunction is indicated, immediately suspend forklift operation. Contact your Local Authorized Dealer for inspection and necessary repair.**

Exclamation Point

The controller and the sensors act together to regulate the forklift's electrical system. Whenever one of the malfunctions listed below occurs, the LCD will show and indication explaining the details of the malfunction:

- Control system malfunction (Traction, Cargo-Handling, Power Steering)
- Overheating Controller or Motor

OPERATOR'S PLATFORM - 2W2 ONLY

OPTIONAL EXTENDED OPERATORS PLATFORM

CAUTION

- **The 2W2 models that have an optional extended operators platform (as shown below) should not be used for loading or unloading loads from docks to trailers due to the reduced floor clearance. This may cause the unit to contact or stop suddenly on the dock or bridge plate or even the trailer floor. This action may cause the load to shift or become unstable, damage the unit, dock plate or trailer floor, possible injury to the operator or others in the area from the unstable condition.**

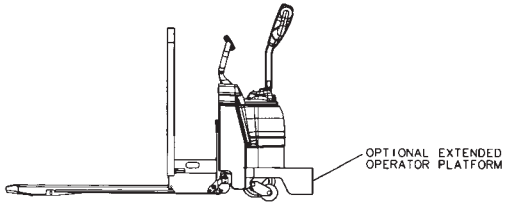

OPERATING CONTROLS AND FUNCTIONS

LOAD CARRYING MECHANISM

OPTIONAL LOAD BACKREST EXTENSIONS

The 2W1 models have two types of load backrest options available and the 2W2 models have three types. Load Backrests can come in different heights depending on each application's needs or requirements.

Slip-On 2W1 and 2W2

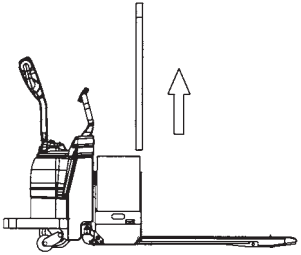

Tilt-Down 2W1 and 2W2

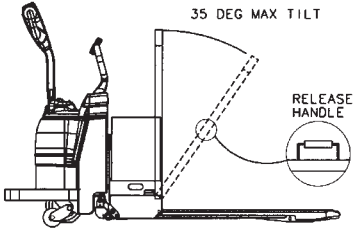

Bolt-On 2W2 Only

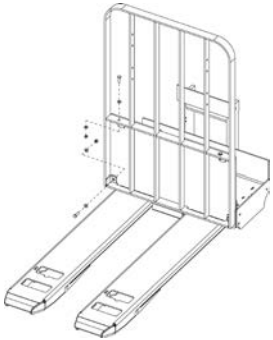

CAUTION

- **The load backrest extension is only to assist in stabilizing a load being carried and to help reduce the possibility of the load falling onto the operator.**
- **The load backrest extension is not made or meant to push or pull loads or other equipment.**

Slip-On Type

The slip-on load backrest extension has channels that slide onto the load backrest on the fork side of the battery compartment.

To remove this backrest extension, fully lower the forks and turn off the ignition switch. Then slide the backrest extension up until it clears the unit's load backrest. Always follow your company's policy for lifting objects to help reduce the risk of injury.

OPERATING CONTROLS AND FUNCTIONS

LOAD CARRYING MECHANISM (cont'd)

OPTIONAL LOAD BACKREST EXTENSIONS (cont'd)

Tilt-Down Type

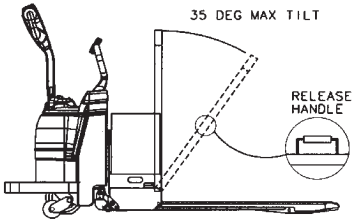

The tilt-down load backrest extension has a release handle located in the middle of the backrest (as shown). This backrest extension only pivots 35º and does not fully lower to the forks.
To lower or pivot the backrest extension down; fully lower the forks and turn off the ignition switch. Then pull up on the release handle and slowly pivot the backrest extension. This backrest extension has stops which will hold it in the 35º position so the battery can be charged.

To place the backrest extension back into operating position; slowly raise the backrest extension while holding the release handle until in place on the unit's load backrest. Release the handle and ensure that the backrest extension has latched into position and will not pivot or move.

WARNING

- **Never operate unit with the load backrest in the pivoted (lowered) position. This may cause damage to the unit or the backrest extension, possible injury to operator or others in the area.**
- **Always ensure that the backrest extension has fully latched into position before placing the unit back into operation.**

Bolt-On Type - 2W2 Only

The bolt-on load backrest extension provides a strong, rugged, reinforced load stabilizing backrest to help steady higher loads. The bolt-on design allows for easy service replacement, if the backrest should become damaged.

To remove this backrest extension, fully lower the forks. Turn off the ignition switch. Support the backrest extension and loosen all bolts and nuts. Remove the lower bolts first and then the upper bolts. Lift backrest off unit. Always follow your company's policy for lifting objects to help reduce the risk of injury.

OPERATING CONTROLS AND FUNCTIONS

LOAD CARRYING MECHANISM (cont'd)

OPTIONAL AUTO LIFT

When equipped with the auto lift function, the load carrying device will automatically keep the height of the load carry device three inches off the ground.

During operation of the unit, if the load carrying device is lowered below three inches, the forks will automatically raise to three inches when the operator stops pushing the lower button.

When loading or unloading pallets from the unit it is necessary for the operator to hold down one of the lower buttons until the pallet is fully engaged or exited.

NOTE:
If the operator presses and holds the lower button and then turns off the ignition switch, the load carrying device will remain lowered to the floor. When the ignition switch is turned on, the load carrying device will remain lowered to the floor until the operator lifts or lowers for the first time.

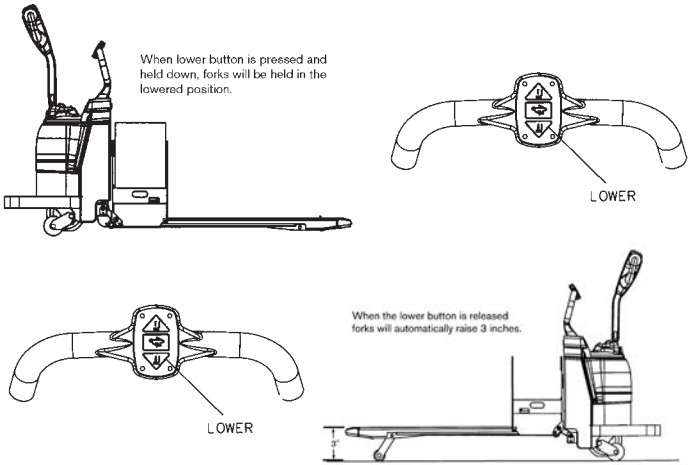

OPERATING CONTROLS AND FUNCTIONS

ACCESSORY POLE OPTION - 2W2 ONLY

The optional accessory pole provides a location to securely attach work options such as:

- Work Lights
- Strobe Light
- Operator Comfort Fan
- Clipboard

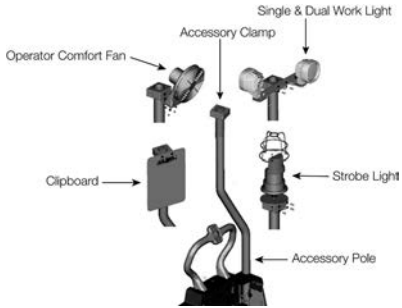

The accessory pole provides for convenient options customized to support your application.

WARNING

- **During travel ensure that the pole and mounted accessories clear doorways or other surrounding obstructions.**
- **Make sure any mounted accessory does not interfere with movement of control handle.**
- **The pole should not be used as a hand hold. The operator should always keep their hands in the proper operating position while riding.**
- **Mounted accessories combined total maximum weight is 25 lbs (11.3 kg).**

OPERATING THE TRUCK

The following are the recommended procedures that should be followed before and while operating a UniCarriers forklift.

Since the Occupational Safety and Health Act (OSHA) 29CFR1910.178(l) requires that "**only trained and authorized operators shall be permitted to operate a powered industrial truck**", it is the owner/end user's responsibility to comply. The following is intended as a guide in training operators in safe truck operation; it is not a training manual nor is it intended to preclude good judgment and common sense.

For a complete listing of what should be covered in a training program, obtain a copy of ANSI/ITSDF B56.1 Safety Standard for Low Lift and High Lift Trucks.(www.itsdf.org).

INSPECTION BEFORE OPERATING

The OSHA regulation requires that the operator completely checks the unit at the beginning of **each shift** or **work period**. Ensure that all of the Daily Inspection checks (refer to page 56, also refer to page 57 for Sample Operator's Daily Checklist) have been made before operating the unit.

OPERATING PRECAUTIONS

Safety Stop System:
This system is designed to stop the forklift when malfunctions occur in the electric system which controls forklift speed. If this system should be activated, turn the ignition switch OFF; then turn it ON again and resume driving the forklift. If the safety stop system begins to operate frequently while starting the forklift or operating the forklift, contact your Local Authorized Dealer.

Prohibitive Overloading the Traction Motor:
Do not overload the truck by climbing a steep slope or dragging heavy objects for an extended period of time. This will cause a great deal of electric current to flow through the motor.

Action to be Taken in an Emergency:
In an emergency, disconnect the battery plug.

PRECAUTIONS FOR OPERATING IN COLD STORAGE

- The truck should not be used in cold storage below -28°C (-20°F).
- The cold reduces the battery capacity approximately 1% per degree below +20°C (+68°F). It also may disturb the activity of the electronic circuits; it makes the oil thicker and more viscous as well as the metal (especially welds) more brittle.
- The cold means that operators wear bulkier clothes, bigger (thicker) shoes, gloves and caps. This could also make it more difficult to operate the truck and makes the operator more insensitive to signals from the truck.
- The truck and operator should not be in a cold storage environment for a period in excess of 30 minutes, whether operating or not.

CONDENSATION

Condensation can be seen on trucks coming out of a cold storage: condensed water is frozen on the truck. This can cause a number of problems. After some time outside the cold storage, the frost melts to water and when the truck enters the cold storage again, any water remaining on the truck will freeze to ice again.

OPERATING THE TRUCK

RECOMMENDATIONS TO AVOID CONDENSATION

- If you have to leave the cold storage, stay outside long enough to allow the truck to dry completely. This time can be shortened by blowing hot air over the truck with big ventilators (fans).
- If you frequently have to go in and out of the cold storage, make the stays inside as short as possible and the stays outside as long as possible so that the temperature of the truck never goes below 0°C (32°F). i.e. doesn't cause water to freeze.
- Or spend as much time as possible inside and as little time as possible outside, but observe that the temperature of the truck doesn't go above 0°C (32°F). i.e. doesn't cause ice to melt.
- When charging batteries observe the above.

OPERATIONAL PROCEDURES

There are certain hazards that cannot be avoided solely by mechanical means in the everyday use of material handling trucks. Only the intelligence, good sense, and care of the operator, along with proper maintenance, will assure that the trucks are operated properly. It is important to have trained, reliable personnel operating your units. If, at any time, the operator finds that the unit is not performing properly, discontinue operation of the truck and report the condition to your supervisor for correction.

When operating the forklift under severe climatic conditions such as high temperature, high altitudes, in cold storages, and when handling explosives and combustibles, and in areas where the forklift is apt to cause radio interference, make sure that the forklift is manufactured and approved as conforming to the local specifications, laws and regulations.

Proper operation of this unit is with the forks (load carrying device) in the fully raised position, except when parked and when entering or leaving a pallet. Always look in the direction of travel.

Operate the unit from the operator’s position after assuring that the operation will not endanger the operator or any other person. Do not operate a truck in hazardous areas. Make sure that the forks and/or load have clearance to lower and do not “hang-up”.

OPERATING THE TRUCK

OPERATIONAL PROCEDURES (cont'd)

Before plugging in the battery
- Make sure that the ignition switch is in the "off" position
- Make sure the steer tiller is in the vertical position (brake on)

1. Plug in the battery connector.
2. **2W2 Only:** When mounting the 2W2 as a rider, grasp the steerhead with one hand and the high speed handle with the other. Step on the operators platform.

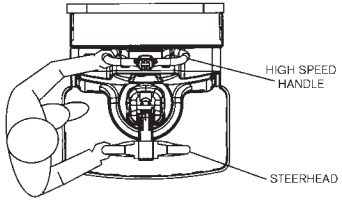

WARNING

- **Always be sure that your feet are within the confines of the platform and that you are positioned for maximum stability.**

3. Turn the ignition switch to the on position.
4. Check hour meter operation.
5. Check the battery discharge indicator gauge (if installed) to see what condition of charge the battery is in. If the gauge shows low (red), the battery must be charged or replaced before operating.
6. Check horn operation, if it does not work do not operator the truck. Always sound your horn at blind corners and intersections before proceeding to travel.
7. Check lift/lower functions. Report any malfunctions.

WARNING

- **Always perform operation checks in a clear area.**

8. Always travel with the load carrying device fully raised whether loaded or unloaded, except when entering or leaving a pallet.

WARNING

- **Be sure that the area being used for test running is clear of pedestrians and obstructions. Operate unit with no load.**
- **Operation at full speed should only be attempted after complete familiarity with all operations or loss of control and serious personal injury may result. Always exercise caution and good judgement while running this unit.**

The most efficient unit operation is achieved while unit is being operated at half speed to full speed. Only attempt full speed after familiarizing yourself with steering and directional controls.

9. When operating either the 2W1 or 2W2 as a walkie with the load carrying device trailing the vehicle, always walk to the side of the unit. Maximum speed is set at 3.5 mph.

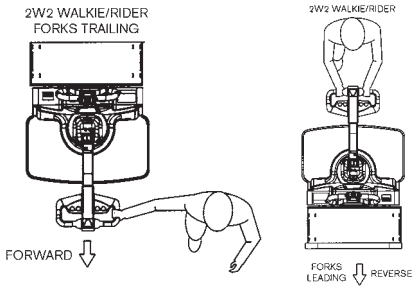

When operating either unit with forks leading, always use two hands on the steerhead. If you can't see don't go, pick another direction which gives you a better view of your operating path.

OPERATING THE TRUCK

STOPPING AND PARKING THE TRUCK

1. Park truck in designated parking areas only.
2. Make sure truck does not block fire aisles, fire equipment, stairways or walkways.
3. Set the parking brake (handle in the vertical position [upright]).
4. Depress the lower button to lower the load carrying device to the floor.
5. Turn ignition switch to “off” position and remove key, if equipped.
6. Disconnect the battery.
7. Block the drive wheel securely to prevent accidental movement on uneven surfaces.

WARNING

- **To prevent unauthorized use, always remove the key, if equipped, from the ignition switch when left unattended unless you are within sight of or less than 8 m (25 ft) from the truck.**

GENERAL CARE AND MAINTENANCE

BATTERY AND BATTERY CHARGING EQUIPMENT

CAUTION

The following information is general information regarding the best methods for using and maintaining the battery, and it in no way can cover every type of manufacture of battery/charger. You should always contact the manufacturer of the battery or charger to ensure that you are following their recommended procedures and operation methods of the equipment.

In cases of a battery not taking a charge, make sure that the charger is being attached to the battery connector and not to the connector on the unit. A battery which does not take a proper charge should be referred to the battery manufacturer's representative for service.

BATTERY CARE AND MAINTENANCE

Refer to the appropriate manuals attached to the battery for information about how to handle and maintain the battery.

CAUTION

- **Do not allow the alkaline solution to fall in the battery cell, this will result in a dead or weak battery.**

Proper care and servicing of the battery is vital to ensure satisfactory operation and life of your electric truck. Battery acid is extremely corrosive and should be washed off the unit if any spills occur.

CAUTION

- **Check with Local and State Regulations on storing, charging and cleaning of corrosive materials. There may be conditions locally which will not allow you to simply wash off acid spills.**

WARNING

- **Only trained and authorized personnel should conduct any maintenance or servicing of this unit and its battery.**
- **Always turn ignition switch off and disconnect battery before doing any servicing of the battery.**
- **Always wear personal protective equipment (PPE), i.e. safety goggles, rubber gloves and boots, when servicing the battery. Battery acid will cause severe burn or injury.**
- **The battery generates highly explosive hydrogen gas. A short circuit resulting in sparks or even a lit cigarette in the vicinity of the battery can cause a serious explosion. Do not permit smoking, open flames or sparks near the battery or battery maintenance area. Be particularly careful during battery charging and for the first 30 minutes following battery charging.**
- **Battery fluid contains highly corrosive sulfuric acid. If acid contacts your skin or clothing, flush the area immediately with large amounts of clean fresh water. If acid enters yours, immediately wash out your eyes with large amounts of clean fresh water and contact a physician. If acid is accidentally swallowed, immediately contact a physician.**
- **If a large quantity of battery fluid is spilled, neutralize it with an equivalent quantity of basic neutralizing agent (baking soda, calcium hydroxide, or sodium carbonate). Wash away the resulting solution with large quantities of clean fresh water. Follow any and all Local, State and Federal Regulations for Hazmat spills.**

BATTERY CARE AND MAINTENANCE (cont'd)

WARNING

- **When changing industrial batteries, replacement batteries shall be of the service weight that falls within the minimum/ maximum range specified on the truck data plate by the truck manufacturer.**
- **Do not place tools or other metallic objects on the top surface of the battery where they may come in contact with the battery terminals and cause an electrical short. This electrical short may cause sparking. The sparking may ignite the hydrogen gas escaping from the battery resulting in a serious explosion. It may cause some nearby object to burn.**
- **Battery fluid exhaustion (gases) creates the danger of explosion. Replenish the battery fluid frequently to maintain the specified fluid level. During battery charging, the proportion of water in the battery fluid decreases. Before battery charging, always check that the battery fluid level is above plates. If the fluid level is low, replenish it with distilled water to cover the plates. Do not overfill to standard level.**
- **After charging is complete fill cells to the standard fill level.**
- **During battery charging, there is a high risk of hydrogen gas explosion. To reduce this risk, always perform battery charging in a well-ventilated room or area. Continue ventilation for at least 30 minutes after the completion of charging.**
- **Do not attempt to recharge a frozen battery; this may cause it to rupture or explode.**

WARNING

- **Cleaning the battery upper surface and connections with certain types of dry cloth or laying a dust cover or vinyl sheet across these areas may create a static electricity charge that can lead to dangerous sparking. An explosion can result. Do not use dust covers or vinyl sheets to protect the battery. If you are cleaning battery surfaces, use a slightly damp cloth.**

CAUTION

- **Over-discharge precautions. Recharge the battery immediately after the meter panel battery warning mark begins to blink. Do not operate the forklift until it simply stops running and then recharge the battery. This technique will result in greatly reduced battery service life. After completing forklift operations, park the forklift and immediately begin battery charging. Do not store a discharged battery for an extended period of time. Recharge it before storing.**
- **The battery and its surroundings should be kept clean and dry at all times. Keep the battery plugs tightly closed to prevent the leakage of battery fluid. Battery fluid leakage will result in battery corrosion.**

BATTERY CARE AND MAINTENANCE (cont'd)

Adding Water

On a routine basis after every 50 hours of operation, remove the battery vent caps and inspect the electrolyte level. The water in the electrolyte solution evaporates at high temperatures or with excessive charging rates. Always refer to the battery manufacturer's specifications for fill levels. Always replenish to the proper lever with distilled water **after charging**.

Cleaning Terminals and Cable Connections

The top of the battery must be kept clean. Tighten the vent caps and clean the battery with a brush dipped in an alkaline solution (ammonia or baking soda and water). After the foaming has stopped, flush top of battery with clean water. If terminals and cable clamps are corroded, disconnect the cables and clean them with the same solution.

BATTERY REPLACEMENT

Battery Selection

Use only batteries that meet the specifications listed on the data plate (refer to page 22).

BATTERY CHARGERS

The off-truck type charger is a separate entity. The battery charger may or may not be included with the truck.

WARNING

Determine the type of battery charger that is used for the forklift you are using. Operate the forklift accordingly.

- **Alternating current power source voltage will vary with the area in which the forklift is used. Determine the local voltage before attempting to charge the battery. Use the appropriate transformer tap on the battery charger.**
- **Tap adjustment requires specialized knowledge and expertise.**
- **Tap configuration must be set before battery charging. For full charging, select a time frame in which minimum voltage fluctuation occurs, then select the appropriate transformer tap. If the wrong tap is selected, over-charging or under-charging will result. If you have any questions, contact your Local Authorized Dealer.**
- **A current or over-current circuit breaker (hereafter referred to simply as breaker) must always be connected to the AC power supply side of the battery charger.**

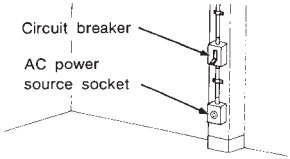

- **Always use charging equipment that is appropriate for the forklift battery being charged.**

BATTERY CHARGERS (cont'd)

WARNING

- **If multiple battery chargers are in use, each battery charger must be equipped with its own circuit breaker.**
- **Alternating current requires high-capacity units. Set the charging equipment power source to the appropriate level.**
- **Specialized knowledge and expertise is required. For information on the legal requirements of your country, contact your Local Authorized Dealer.**

BATTERY CHARGE CLASSIFICATIONS

Normal Battery Charge
The normal battery charge is used to restore the battery to its original power level.

Equation Battery Charge
When the normal battery charge is applied many times, the voltage level and the battery fluid specific gravity of the individual cells will show a wide variation. This wide variation will prevent full charging of the battery. Equation battery charge is used to equalize individual cell voltage and battery fluid specific gravity and make full battery charging possible again.

As a general rule, a battery charged and discharged on a daily basis should have equation charging applied after every 10 or 15 charge/discharge cycles.

Additionally, equation charging should be performed as soon as possible if any of the following conditions occur.

a. Battery discharge in excess of the specified limit.
b. Battery charging following discharge is delayed for an extended time period.
c. A battery short circuit has occurred.
d. A battery that has not been used for an extended time period is readied for use.

BATTERY CHARGE CLASSIFICATIONS (cont'd)

CAUTION

- **Equation battery charging is used to restore a battery to its full potential. However, it should not be performed too frequently. Frequent equation battery charging will result in a greatly reduced battery service life.**

NOTE:

- The battery consists of lead cells connected in series to one another. Each cell has a capacity of approximately 2 volts. There are several dozen cells. The connected cells are contained in the battery case. When there is significant variation in voltage and battery fluid specific gravity between individual battery cells, full charging will not be possible.

- With some battery charging equipment, equation battery charging occurs automatically after some specified number of charge/discharge cycles. Manual selection of the equation battery charging mode is not required.

CHARGING PREPARATIONS

1. Move the forklift to the charging area and park it.
2. Check the battery fluid level. Replenish the battery fluid to the specified level with distilled water as required.
3. Check that the circuit breaker on the AC power supply side is OFF.

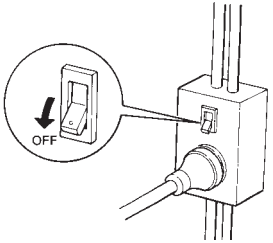

WARNING

- **During battery charging, large quantities of highly-explosive hydrogen gas may be released from the battery. To minimize the danger of an explosion, battery charging should be performed in a well-ventilated area protected from direct sunlight. Remove all objects that might ignite the gas from the immediate area before beginning charging.**

NOTE:
Transformer tap selection is required before beginning charging. Measure the charger power supply voltage. Select the appropriate transformer tap.

Selection of the wrong tap will result in battery over-charging or under-charging. Contact your Local Authorized Dealer if you require more detailed information.

GENERAL CARE AND MAINTENANCE

HOW TO CHARGE BATTERY (OFF-FORKLIFT TYPE)

Charge the battery according to the manual supplied with the charger being used.

1. Ensure the supply side voltage corresponds with the charger input voltage.

NOTE:
The battery chargers are preset to the following input voltages at the time of delivery:
220V ... 200-volt charger
440V ... 400-volt charger

2. If the charger input voltage does not correspond with the supply voltage, the input side voltage is adjustable as follows using the tap changer located inside the charger.

WARNING

- **Unplug the charger before adjustment. Serious injury or death can occur by electrical shock.**

BATTERY GATE SWITCHES (OPTION)

Your unit may have optional battery gate switches. If gates are not installed when the ignition switch is turned ON, the unit will not travel and alarm codes 02 85 (for MDI) / A266 (for ECO Display Panel) will be displayed.

If one or both battery gates should fall out during operation (traveling), the truck will coast to a stop. Alarm codes 02 85 (for MDI) / A266 (for ECO Display Panel) will be displayed.

WARNING

- **Ensure battery side gates are secured in place before operating the unit. Failure to do so could allow the battery to suddenly slide out of the truck causing serious personal injury and/or damage to the truck and/or battery.**

GENERAL CARE AND MAINTENANCE

DAILY INSPECTION

To maintain your forklift in proper condition and ready for safe operation, be sure to perform the daily checks indicated below. If you note any malfunction notify your Local Authorized Dealer.

1. Check battery fluid level.
2. Check hydraulic oil level and for oil line leaks.
3. Check for full motion and proper function of all the steering and travel controls.
4. Check the condition of tires and wheels. Check for looseness, wear or damage of wheel nuts and bolts.
   - Remove objects that are embedded in the tread.
   - Check for damage and friction of wheels and for bends and cracks in the wheel hub.
5. Check that all guards, horn, lights, limit switches, warning and safety devices, indicators, etc. are functional.
6. Check safety start systems operation
7. Check lift mechanism for the following items:
   - Smooth lifting and lowering
   - Check operation of hydraulic pump
   - Lift linkage
   - Load wheel link
8. Conduct an operational check, including braking functions and plugging distance.
9. Check forks and frame for cracks, breaks, bend and wear.
10. Check the backrest, if equipped, for proper installation and function.
11. Inspect the condition of battery connectors, electrical cables and wiring. Make a report of any found to be worn or cracked.
12. Check that the battery gates (retainers), if used, are in place and working properly.
13. Check additional options, i.e. attachments or special equipment as specified by the manufacturer or employer.
14. Check that capacity plates and decals are legible, if not replace.

WARNING

- **If the truck is found to be in need of repair or in any way unsafe, or contributes to an unsafe condition, or if during operation the truck becomes unsafe in any way, the matter shall be reported immediately to your designated authority, and the truck shall not be operated until it has been restored to safe operating condition.**
- **Do not make repairs or adjustments unless specifically authorized to do so.**
- **Do not use open flames when checking electrolyte level in storage batteries.**
- **Be certain that your truck is the correct UL safety rating type for the area in which you are working. The proper type designation for the industrial truck is on the data plate. In areas classified as hazardous, use only trucks approved for use in those areas. All hazardous areas should have classified markings. If you are unsure of the classification of the area you wish to enter, ask your designated authority before entering.**

GENERAL CARE AND MAINTENANCE

OPERATOR'S DAILY CHECKLIST (SAMPLE)

WARNING

Carry out the daily checks as per “Daily Inspection” in this Operator’s Manual on page 56 and the applicable provisions of laws and regulations of your country. (In U.S. OSHA 29CFR1910.178)

Operator’s Daily Checklist and Safety Inspection (sample)
I.T.A. Class I, II & III

IMPORTANT: Check each of the following items before the start of each shift. Notify your supervisor and/or maintenance department if there are any problems with the forklift.
DO NOT OPERATE A FORKLIFT WITH ANY MALFUNCTION.

FORKLIFT DETAILS:
Electric Sit-down Electric Stand-up Electric Pallet Serial/Unit Number:_____ Operator:_____ Supervisor’s OK:_____
Please review the list below and mark each item accordingly. Please provide any additional explanation as necessary.

#	OK	NG	Visual Check Items	#	OK	NG	Operational Checks
01			Forks: bent, worn, stops, forklocks OK	18			Horn Operation
02			Load Backrest: bent, cracked, loose, missing	19			Operator Restraint (if equipped): operation
03			Tires/Wheels: wear, damage, nuts tight	20			Brake: loose/binding, operation, adjustment
04			Battery Connectors: cracked, loose, missing	21			Seat Brake (if equipped): loose/binding, operation
05			Hydraulic Oil: level, dirty, leaks	22			Mast: smooth lifting/lowering and roller rotation, wear or damage to chains or mast rails
06			Covers/Sheet Metal: damage, missing	23			Tilt: loose/binding, excessive drift, “chatters”, leaks
07			Overhead Guard: bent, cracked, loose, missing	24			Carriage and Attachments: operation, leaks
08			Battery: connections loose, state of charge, electrolyte level	25			Control levers: loose/binding, free return to neutral position
09			Warning Decals/Operator’s Manual: missing, unreadable	26			Battery Test: indicator shows full charge while holding full forward tilt
10			Data Plate/Capacity Plate: incorrect: unreadable, missing	27			Directional Control: loose/binding, find neutral position OK
11			Operator Restraint (if equipped): damage, mounting, operation, oily, dirty	28			Drive Axle: noise, leaks
12			Gauges/Instruments: damage, operation	29			Steering: loose/binding, leaks, operation
13			Brakes: linkage loose, reservoir fluid level, leaks	30			Warning Lights (if equipped): mounting, operation
14			Carriage and Attachments: damage, mounting, operation, leaks	31			Back-Up Alarm (if equipped): mounting, operation
15			Head/Tail/Working Lights: damage, mounting	32			Head/Tail/Working Lights: mounting, operation
16			Side Gates: damage	33			Side Gates: operation, binding
17			Battery Retainer: damage, latched, operation	34			Battery Retainer: operation

Additional explanation of problems marked above:_____

GENERAL CARE AND MAINTENANCE

MAINTENANCE AND INSPECTION

HYDRAULIC OIL LEVEL

Check the oil level in the hydraulic oil reservoir. The oil level should be at the bottom of the elbow for the breather cap (fill tube), when forks are fully lowered.

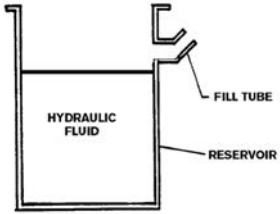

REFILLING HYDRAULIC OIL

Remove the front vent plug. This vent allows easy refilling of the reservoir. The reservoir takes approximately 2 quarts (1.9 liters) of hydraulic fluid, pour the specified hydraulic oil into the fill tube until the oil level is in the proper area (refer to page 65).

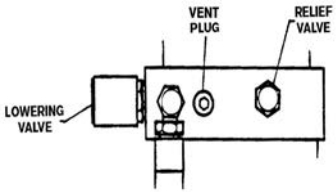

NOTE:
When filling the reservoir, make sure the cylinder is fully lowered.

CAUTION

- **Do not use any hydraulic oil other than those specified by the OEM, otherwise it may cause not only deterioration in the performance of the forklift but could result forks not lifting or staying raised.**
- **Carefully add the hydraulic oil so as not to mix dust and foreign substances in the oil.**

TIRE REPLACEMENT

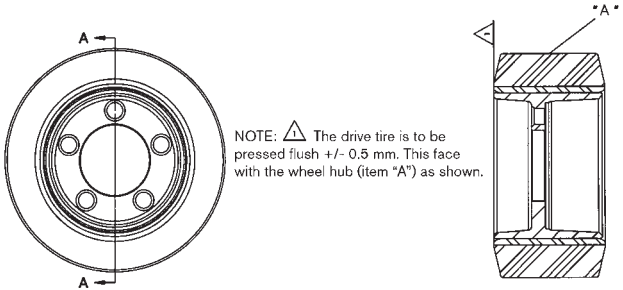

There are many different sizes and compounds of drive tires used. Our standard size tire is 10" x 5" x 6-1/2".

CAUTION

- **Caution must always be exercised when pressing a new tire onto the hub. The dimensions from the face of the hub to the edge of the tire is very important in the operation of the truck, to clear the transmission housing.**

If pressing and dimensions are not maintained and the tire does rub the transmission, this could cause any of the following to occur:

- A bond failure from heat.
- Transmission housing could be worn beyond repair causing gears to fail.
- Drive motor damaged due to excessive amp. draw.
- Electrical components fail due to excessive amp. draw and/or heat.

GENERAL CARE AND MAINTENANCE

MAINTENANCE AND INSPECTION (cont'd)

TIRE REPLACEMENT (cont'd)

There are many different compounds of tires used on our equipment. We have standard components that we use on the various models of trucks. Just because we use something as a standard, it does not necessarily mean that compound is the best for your application. If there are complaints of traction or failures, etc., maybe your application requires another type of tire. Always use only OEM tires and sizes. Contact your local authorized dealer for more information.

TIRE ASSEMBLY INSTALLATION

In order to install the tire assembly to the transmission, there are five nuts that are used for mounting to the output shaft.

Tighten the five nuts in a pattern of every other nut. This will ensure the assembly is flush with the output shaft.

All wheel nuts must be torqued to 135 Nm/100 ft-lbs.
After the nuts are torqued, look into the center of the wheel hub and make sure the hub is flush against the output shaft.

GENERAL CARE AND MAINTENANCE

MAINTENANCE AND INSPECTION (cont'd)

FORK INSPECTION

Ensure the forks and linkage are not damaged or loose.

WARNING

- **Forks in use shall be inspected at intervals of not more than 12 months.**

FORK REPAIR

Repair - Only the manufacturer of the fork or an expert of equal competence shall decide if a fork may be repaired for continued use, and the repairs shall only be carried out by such parties.

CHECKING HORN

Check the horn for proper operation.

CHECKING LIGHTS (OPTION)

Mark sure that lights illuminate when switches are placed into the "ON" position.

CHECKING SAFETY START SYSTEM OPERATION

Check the safety start system in a clear area away from other forklifts and personnel.

With the battery connected and the ignition switch in the "OFF" position, move the tiller handle into the operating position. Rotate thumb control to either the forward or reverse direction. Turn ignition switch to the "ON" position, the unit should not move but will display an alarm code in the MDI, or ECO panel.

If unit starts to travel shut it down, turn ignition switch to the "OFF" position, unplug the battery and tack it out of service. Contact your Local Authorized Dealer to repair unit.

FUSES

WARNING

- **Remove all jewelry.**
- **Make sure the ignition switch is "OFF" and disconnect the battery before changing any components or disconnecting any wiring. This will reduce the possibility of damage to the controller system.**

Visually check if the fuse is blown. Before replacing any malfunctioning fuse, check and correct the cause of the malfunction. Use a fuse of the specified rating which is clearly shown on the label.

GENERAL CARE AND MAINTENANCE

PERIODIC MAINTENANCE AND LUBRICATION SCHEDULE

Before delivery of your new forklift, your dealer provides a pre-delivery inspection and adjustment service specified by the factory and designed to ensure satisfactory performance.

The following tables list the servicing required to keep your forklift operating in good mechanical condition. The forklift should be attended to as indicated, preferably by your Local Authorized Dealer.

WARNING

- **Do not inspect any part of the system while the battery is being charged.**
- **Before checking any part of the system, be sure to disconnect both connectors from the battery.**
- **When it is necessary to check with the battery connected, raise the drive wheels. Be extremely careful to prevent electric shocks.**

NOTE:

- Periodic maintenance should be performed after specified intervals have elapsed in months or hours, whichever comes first.
- Under dusty, dirty or heavy operation, more frequent maintenance is necessary. All items listed must be maintained in order to meet and keep control systems operating at design level. Failure to maintain the systems could compromise the warranty.
- The inspection/service intervals shown are based on the assumption that the vehicle is operated in a clean and dry environment for 200 hours or less in one month. When determining the inspection/service intervals, consider the actual working conditions of the vehicle.

GENERAL CARE AND MAINTENANCE

PERIODIC MAINTENANCE AND LUBRICATION SCHEDULE (cont'd)

Inspection Items			Interval													How to check
			Months	1	2	3	4	5	6	7	8	9	10	11	12	
			Hundreds of hours	2	4	6	8	10	12	14	16	18	20	22	24	
Drive system	Motor	Motor (dust)		C	C	C	C	C	C	C	C	C	C	C	C	Clean
		Wiring, bolts and nuts		I		I		I		I		I		I	I	Visual
		Amp draw reading for lift pump and drive motor							T						T	Test
	Controller	Resistance between forklift body and +/- terminal of battery/controller				I			I			I			I	Measure resistance
		Contactor operation		I		I			I			I			I	Visual
		Contactor tips		I		I			I			I			I	Visual
		Resistance contactor coil													I	Measure
		Controller fans		I	I	I	I	I	I	I	I	I	I	I	I	Visual
		Wiring, bolts and nuts		I		I			I			I			I	Visual
		Controller surface		C		C	C		C	C		C	C		C	Clean
Electric system		Battery: mounting, level and specific gravity		I	I	I	I	I	I	I	I	I	I	I	I	Visual/Test
		Truck Harness and connectors		I		I			I			I			I	Visual
		Switches		I	I	I	I	I	I	I	I	I	I	I	I	Visual/Test
		Lights (option)		I	I	I	I	I	I	I	I	I	I	I	I	Test
		Horn/Buzzer		I	I	I	I	I	I	I	I	I	I	I	I	Test
		Gauge, indicators, warning and safety devices		I	I	I	I	I	I	I	I	I	I	I	I	Test
		Check speed of truck and plugging distance (approx. the length of the truck including forks, unloaded)		I	I	I	I	I	I	I	I	I	I	I	I	Test

Abbreviations: I = Inspect (correct or replace if necessary), D: Drain, R: Replacement, A: Adjustment, C: Clean, T: Test, L: Lubricate/Grease

GENERAL CARE AND MAINTENANCE

PERIODIC MAINTENANCE AND LUBRICATION SCHEDULE (cont'd)

Inspection items			Interval													How to check
			Months	1	2	3	4	5	6	7	8	9	10	11	12	
			Hundreds of hours	2	4	6	8	10	12	14	16	18	20	22	24	
Chassis and body maintenance	Transmission/ drive unit	Crack, damage and leakage		I		I			I			I			I	Visual
		Differential/drive unit oil level		R	I	I	I	I	I	I	I	I	I	I	R	Visual/replace
		Drive tire nut torque to 135 Nm / 100 ft-lbs		I		I		I		I		I		I	I	Test
	Lifting mechanism	Lubricate entire truck		L	L	L	L	L	L	L	L	L	L	L	L	Grease
		Hydraulic oil pump operation		I		I			I			I			I	Test
		Cracks or damage to chassis & fork area		I		I			I			I			I	Visual
		Lift linkage & tie rod for worn bearings							I						I	Visual
		Hydraulic system for leaks		I	I	I	I	I	I	I	I	I	I	I	I	Visual
		Hydraulic oil level (forks fully lowered)		I	I	I	I	I	I	I	I	I	I	I	I	Visual
		Hydraulic oil replacement							R						R	Replace
		Suction oil filter							C						C	Replace
		Lift cylinder		I		I			I			I			I	Visual
	Wheels/ tires	Wheels and tires: wear, damage and foreign material		I	I	I	I	I	I	I	I	I	I	I	I	Visual
		Caster wheel adjustment (2W2 only)		I		I		I		I		I		I	I	Adjust
		Wheel bearing grease		L	L	L	L	L	L	L	L	L	L	L	L	Grease

Abbreviations: I = Inspect (correct or replace if necessary), D: Drain, R: Replacement, A: Adjustment, C: Clean, T: Retighten, L: Lubricate/Grease

GENERAL CARE AND MAINTENANCE

PERIODIC MAINTENANCE AND LUBRICATION SCHEDULE (cont'd)

Inspection items			Interval													How to check
			Months	1	2	3	4	5	6	7	8	9	10	11	12	
			Hundreds of hours	2	4	6	8	10	12	14	16	18	20	22	24	
Chassis and body maintenance	Steering system	Function of steering system		I	I	I	I	I	I	I	I	I	I	I	I	Test
		Mounting of steer tiller handle		I	I	I	I	I	I	I	I	I	I	I	I	Visual
		Steering tiller (movement and play)		I	I	I	I	I	I	I	I	I	I	I	I	Visual
	Brake system	Function of brake, tiller return to full up position smoothly (with brake on)		I	I	I	I	I	I	I	I	I	I	I	I	Test
		Check return spring linkage for damage							I						I	Visual
		Brake rotor air gap		I		I			I			I			I	Test
		Brake function/effort, stopping distance (approx. the length of the truck including forks, unloaded)		I		I			I			I			I	Test

Abbreviations: I = Inspect (correct or replace if necessary), D: Drain, R: Replacement, A: Adjustment, C: Clean, T: Retighten, L: Lubricate/Grease

GENERAL CARE AND MAINTENANCE

LUBRICATION CHART

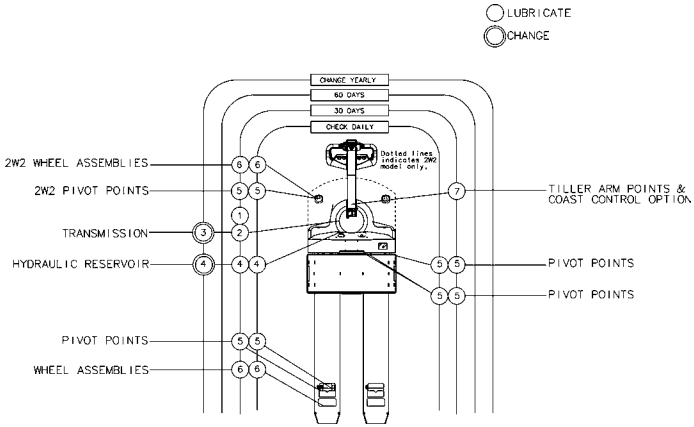

Item #	Description	Lub. Points	Type of Lubricant	Interval
1	Transmission Fill Plug	(1)	*Chevron SAE 80/90	30 Days; 200 Hours
2	Transmission Steer Bearing	(2)	*Chevron LC Grease EP #Mobil Grease 28 (synthetic)	30 Days; 200 Hours
3	Transmission Drain	(1)	*Chevron SAE 80/90	Change after first 200 Hours, then Yearly
4	Hydraulic Reservoir	(1)	*Daphne Fluid AW32 BH-U #Mobil DTE 13M	30 Days; 200 Hours
5	Pivot Points	(15)	*Chevron LC Grease EP #Mobil Grease 28 (synthetic)	30 Days; 200 Hours
6	Wheel Assemblies	(6)	*Chevron LC Grease EP #Mobil Grease 28 (synthetic)	30 Days; 200 Hours
7	Tiller Arm & Coast Control	(3)	Spray White Lithium	30 Days; 200 Hours

*Standard Lubrication #Lubricant used in freezer operation only.

GENERAL CARE AND MAINTENANCE

PUTTING FORKLIFT IN STORAGE

Putting the forklift in storage involves storing the forklift at the end of each working day or storing the forklift over a long period of time.

Be sure to observe the precautions for forklift storage.

DAILY STORAGE

At the end of the working day, check the forklift for oil leakage and other malfunctions. Always park it in the designated location. Put chocks under the tires to prevent the forklift from moving by itself.

Keep the body and areas surrounding the driver platform clean. Make it a habit to always keep the forklift clean.

CAUTION

- **The forklift has many electrical parts, do not wash with water. However, the battery can be washed with water after removing it from the forklift, but it must be completely dry before use.**
- **Blow off dust and dirt using compressed air with OSHA air nozzle or wipe with a wet cloth to clean the forklift.**

WARNING

- **As soon as a malfunction is detected, immediately report it to the appropriate personnel or contact your Local Authorized Dealer for repair. Do not operate the forklift until the malfunctions is repaired.**

STORAGE OVER A LONG PERIOD OF TIME

When the operation of the forklift is completely suspended for a given period of time, take the following measures and store the forklift in a dry area.

NOTE:

- When the forklift cannot be stored indoors, park it on level ground. Cover with a waterproof sheet or protective cover.
- When storing for a long period of time, be sure to consult your Local Authorized Dealer.

WARNING

- **Do not use a protective covering or waterproof sheet made of vinyl which is liable to produce static electricity. Static electricity may cause the battery to explode.**

PRE-STORAGE SERVICING

1. Lubricate the forklift (refer to page 65). Change the oil and coat all exposed areas of hydraulic cylinders with corrosion resistant grease.
2. Charge the battery and leave it disconnected from the forklift. Store the forklift in a low fire-risk area.

SERVICING THE FORKLIFT IN STORAGE

1. Periodically check the specific gravity and level the battery fluid. Charge and replenish as necessary. Perform uniform charge on the battery every 2 months.
2. Check various sections of the forklift for stains or corrosion. Clean such areas and coat with a corrosion preventive agent.

PUTTING FORKLIFT IN STORAGE (cont'd)

POST-STORAGE SERVICING

1. Wipe anticorrosive grease off the outer parts of the oil pressure cylinder.
2. Lubricate each part.
3. Check the battery fluid level and specific gravity. Fully charge the battery.
4. Turn the ignition switch "ON" and check the meters, warning lights and indicators.
5. Perform Daily Inspection (refer to page 56).

SPECIFICATIONS

MODEL VARIATION (LONG MODEL CODE) BREAKDOWN

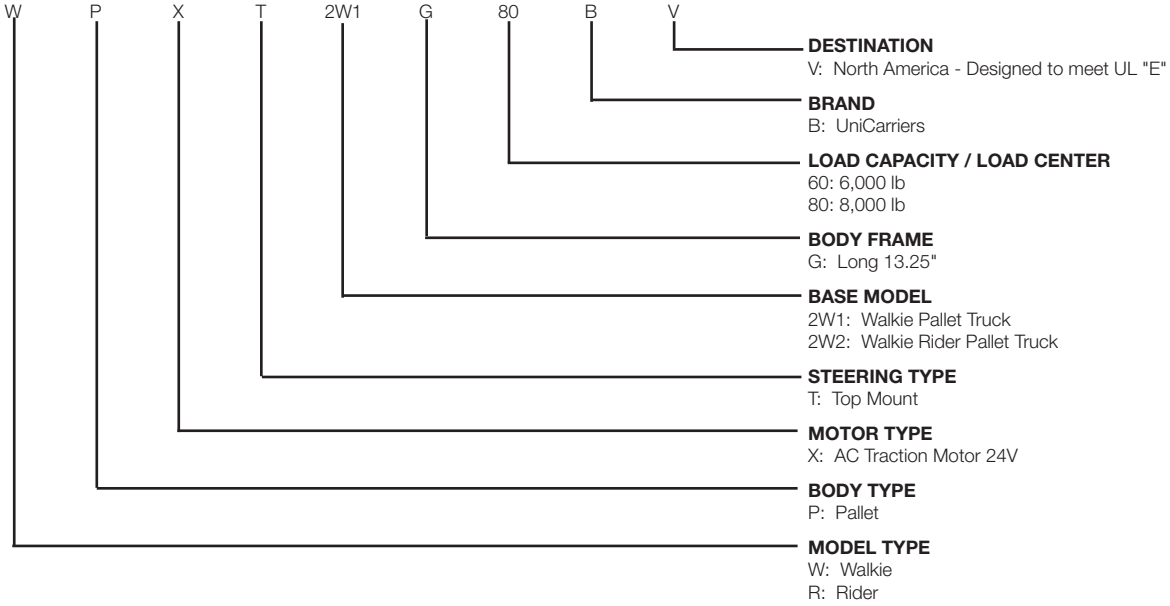

SPECIFICATIONS

MAIN TRUCK - 2W1/2W2

Item		Model code	2W1		2W2	
			WPXT2W1G60NV/BV	WPXT2W1G80NV/BV	RPXT2W2G60NV/BV	RPXT2W2G80NV/BV
Rated Load Capacity		lb (kg)	Refer to Truck Data Plate			
Truck Weight		lb (kg)	Refer to Truck Data Plate			
Power Type - Electric			24 Volt			
Overall Dimensions	Head Length	in (mm)	34.5 (875)		42.9 (1090)	
Chassis Width		in (mm)	32 (815)		35.6 (905)	
Tires / Wheels	Drive tire-dia. x width	in (mm)	10 x 5 (254 x 127)			
	Caster wheel-dia. x width	in (mm)	--		5 x 2.5 (127 x 64)	
	Load wheel-dia. x width	in (mm)	3.25 x 6 (83 x 152)			
Lifting Speed	Full Load	sec	5.1	6.1	5.1	6.1
	Empty	sec	3.6			
Lowering Speed	Full Load	sec	4.8	4.7	4.8	4.7
	Empty	sec	5.1			
Travel Speed	Full Load	mph (kph)	3.7 (5.9)		6.6 (10.6)	6.1 (9.8)
	Empty	mph (kph)	3.7 (5.9)		9.1 (14.6)	
*Battery Compartment Size	Length x Width x Height	in (mm)	31.9 x 13.1 x 32 (810 x 330 x 800)		31.9 x 13.25 x 32 (810 x 335 x 815)	
Amp Hr Capacity	Max (6-hr)	Ah	840		840	
Weight	Min	lb (kg)	900 (410)		900 (410)	
	Max	lb (kg)	1500 (680)			
Lead Length	Position "B"	in (mm)	20 (508)			

*Battery compartment size with adjustable retainers - 30.9 x 13.25 x 32 (785 x 335 x 815); w/optional rollers & side gates - 31.1 x 13.25 x 32 (790 x 335 x 815)

SPECIFICATIONS

AISLE - 2W1

Item		Model code	Single Pallet				Double Pallet
			36	42	48	84	96
Fork Size	Outside Spread	in (mm)	27 (685)				
Fork Height	Raised Position	in (mm)	9.25 (235)				
	Lowered Position	in (mm)	3.25 (82.5)				
Individual Fork Width		in (mm)	9.25 (235)				
Fork Length	Nominal	in	36	42	48	84	96
	Actual	in (mm)	35.7 (910)	41.7 (1060)	47.7 (1210)	83.7 (2125)	95.7 (2430)
Overall Truck Length		in (mm)	70.4 (1790)	76.4 (1940)	82.4 (2095)	118.4 (3010)	130.4 (3315)
Face of Forks to Center of Load Wheel	Forks Raised	in (mm)	24.4 (620)	30.4 (770)	36.4 (925)	56.5 (1435)	56.5 (1435)
	Forks Lowered	in (mm)	28.0 (710)	34.0 (865)	40.0 (1015)	60.1 (1525)	60.1 (1525)
Center of Load Wheel to Tip of Forks	Forks Raised	in (mm)	11.3 (290)			27.2 (690)	39.2 (995)
	Forks Lowered	in (mm)	7.7 (195)			23.6 (600)	35.6 (905)
Wheelbase	Forks Raised	in (mm)	51.6 (1310)	57.6 (1465)	63.6 (1615)	83.5 (2120)	83.5 (2120)
	Forks Lowered	in (mm)	55.2 (1405)	61.2 (1555)	67.2 (1710)	87.1 (2215)	87.1 (2215)
Grade Clearance	Forks Raised w/Pallet	%	36.4	32.5	29.4	22.4	22.4
Turning Radius		in (mm)	59.6 (1515)	65.5 (1665)	71.5 (1820)	91.4 (2325)	91.4 (2325)
*Right Angle Stacking Aisle	40", 42", 48" Load Width	in (mm)	69.0 (1755)	75.0 (1905)	81.0 (2060)	119 (3015)	131.0 (3325)
*90º Equal Intersecting Aisle	40" Load Width	in (mm)	57.5 (1460)	60.6 (1540)	63.8 (1620)	75.4 (1915)	76.8 (1950)
	42" Load Width	in (mm)	58.6 (1490)	61.7 (1570)	64.9 (1650)	76.5 (1945)	77.9 (1980)
	48" Load Width	in (mm)	61.9 (1575)	65.0 (1655)	68.2 (1735)	79.8 (2025)	81.2 (2065)

*Add 6-8" for ease of operation. Includes 1" clearance on each side of load

SPECIFICATIONS

AISLE - 2W2

Item		Model code	Single Pallet			Double Pallet	
			36	42	48	84	96
Fork Size	Outside Spread	in (mm)	27 (685)				
Fork Height	Raised Position	in (mm)	9.25 (235)				
	Lowered Position	in (mm)	3.25 (82.5)				
Individual Fork Width		in (mm)	9.25 (235)				
Fork Length	Nominal	in	36	42	48	84	96
	Actual	in (mm)	35.7 (910)	41.7 (1060)	47.7 (1210)	83.7 (2125)	95.7 (2430)
Overall Truck Length		in (mm)	78.8 (2000)	84.8 (2155)	90.8 (2305)	126.8 (3220)	138.8 (3530)
Face of Forks to Center of Load Wheel	Forks Raised	in (mm)	24.4 (620)	30.4 (770)	36.4 (925)	56.5 (1435)	
	Forks Lowered	in (mm)	28.0 (710)	34.0 (865)	40.0 (1015)	60.1 (1525)	
Center of Load Wheel to Tip of Forks	Forks Raised	in (mm)	11.3 (290)			27.2 (690)	39.2 (995)
	Forks Lowered	in (mm)	7.7 (195)			23.6 (605)	35.6 (905)
Wheelbase	Forks Raised	in (mm)	51.6 (1310)	57.6 (1465)	63.6 (1615)	83.5 (2120)	83.5 (2120)
	Forks Lowered	in (mm)	55.2 (1405)	61.2 (1555)	67.2 (1710)	87.1 (2215)	87.1 (2215)
Grade Clearance	Forks Raised w/Pallet	%	36.4	32.5	29.4	22.4	
Turning Radius		in (mm)	68.0 (1730)	73.9 (1875)	79.7 (2025)	99.5 (2530)	
*Right Angle Stacking Aisle	40", 42", 48" Load Width	in (mm)	78.0 (1980)	84.0 (2130)	90.0 (2285)	128.0 (3230)	140.0 (3540)
*90º Equal Intersecting Aisle	40" Load Width	in (mm)	66.2 (1685)	69.3 (1760)	72.4 (1840)	83.6 (2125)	84.7 (2150)
	42" Load Width	in (mm)	67.2 (1710)	70.3 (1785)	73.4 (1865)	84.6 (2150)	85.8 (2180)
	48" Load Width	in (mm)	70.3 (1785)	73.4 (1865)	76.2 (1945)	87.8 (2230)	88.9 (2260)

*Add 6-8" for ease of operation. Includes 1" clearance on each side of load

SPECIFICATIONS

OIL CAPACITY

Model	2W1	2W2
Hydraulic Oil Tank ℓ (US qt)	1.9 (2)	
Transmission ℓ (US pt)	1.7 (3.5)	

INDEX

A

A Word to UniCarriers Forklift Operators 3
Accessory Pole Decal 24
Accessory Pole Option 45
Application Area for UniCarriers Trucks 25
Applications 25
Auto Lift Option 44

B

Battery and Battery Charging Equipment ... 50
Battery Care and Maintenance 50
Battery Charge Classifications 53
Battery Chargers 52
Battery Gate Decal 23
Battery Gate Switches Option 55
Battery Replacement 52

C

Charging Preparations 54
Checking Horn 60
Checking Lights Option 60
Checking Safety Start System Operation ... 60
Coast Control Decal 24
Condensation 46
Cruise Control Option 33

D

Daily Inspection 7,11,56
Daily Storage 66
Data Plate 22
Dockboards (Bridge Plates), Trucks and Railroad Cars 18

E

Electronic Activated Coast Control 30

F

Fork Inspection 60
Fork Repair 60
Fuses 60

G

General Safety Rules and Practices 12

H

High Speed Button 33
High Speed Handle 33
Horn Button 27, 33
How to Charge Battery (Off-Forklift Type) 55
Hydraulic Oil Level 58
Hydraulic Oil Refilling 58
How to use this Manual 8

I

Identification Numbers 22
Inspection before Operating 46
Introduction 7

I

Ignition Switch 34

L

Lift Button 27, 33
Load Backrest Extension Options 42
Loading 17
Lower Button 27, 33
Lubrication Chart 65

M

Main Components 26
Maintenance and Servicing 7
Multi-Function Digital Indicator (MDI) 34
Multi-Function LCD Display Option 35

N

No Riders 14
No Riding Decal 24

INDEX

O

Oil Capacity 72
Operating Precautions 46
Operational Procedures 47
Operator Responsibility..... 11
Operator Qualifications 10
Operator's Daily Checklist (Sample) 57
Operator's Platform Extended Option 41

P

Periodic Maintenance and Lubrication Schedule 61
Person Protective Equipment for Operating Forklift 10
Pinch Point Decal 23
Planned Maintenance 7
Post-Storage Servicing..... 67
Position of Data & Capacity Plates and Decals 19
Pre-Storage Servicing..... 66
Precautions for Operating in Cold Storage. 46
Prohibited Applications for UniCarriers Trucks 25

R

Recommendations to Avoid Condensation 47
Rotary Thumb Controls 28

S

Safety Reverse Button 27
Safety Signs and Safety Messages 9
Servicing the Forklift in Storage..... 60
Sidetracker Option..... 31
Solenoid Coast Control Decal 24
Specifications, Aisle 70
Specifications, Main Truck 69
Specifications, Model Variation (Long Model Code) Breakdown 68
Steer Tiller 28
Steerhead and Tiller Assembly..... 27
Stopping and Parking the Truck..... 49
Storage over a Long Period of Time 66
Surface & Capacity..... 19

T

Table of Contents 4
Tire Assembly Installation..... 59
Tire Replacement 58
Traveling 14
Truck Modifications..... 4

W

Warning Drive Decal (Trained and Authorized) 23
Warning Symbols & Levels..... 9

UNICARRIERS GENUINE PARTS

Always use UniCarriers Genuine Parts

At first glance, it's hard to tell one part from another. The truth is, all replacement parts aren't created equal. UniCarriers Genuine Parts satisfy the same technical specifications (engine performance, sound quality, reliability, etc.) as the original parts fitted on the vehicle, providing **original equipment performance, durability and reliability. This way you can ensure that your UniCarriers industrial truck will always perform at its best. This is one of the many things that make UniCarriers Genuine Forklift Parts the best choice to help maintain the value of your UniCarriers industrial truck.**

So make sure, next time your truck needs service:

Demand The Brand®

UNICARRIERS®
GENUINE PARTS

DISPOSAL OF PARTS AND MATERIALS

WARNING

- **Used parts and materials such as lubricants, oils, paint, rags, battery fluid and batteries shall be disposed of as per the applicable provisions of the laws and regulations of your country, state or local regulations.**
- **Also consult your Local Authorized Dealer.**

UniCarriers Americas Corporation

©UniCarriers Americas Corporation
240 N. Prospect Street, Marengo, IL 60152 USA
Tel: +1-815-568-0061 Fax: +1-815-568-0179
www.unicarriersamericas.com

UniCarriers® is a registered trademark of UniCarriers Corporation